Lead Screw and Nut Assemblies

Kerk Lead Screw Assemblies are modified Acme thread forms optimized for performance and available in a broad range of lead screw diameters, leads and nut styles, custom designed for your application. Kerk lead screws are self-adjusting, maintenance-free and require no lubrication. Providing maximum accuracy, high reliability, smooth, quiet operation and low cost, Kerk lead screw assemblies are your best choice for high performance linear motion control.

Kerk Lead Screws

- Available in standard diameters from 5/64-in (2 mm) to 15/16-in (23 mm)
- Standard leads from .012-in to almost 4-in (0.30 mm to 92 mm) including native metric and left hand threads
- Custom sizes and leads can be special ordered
- Positional bi-directional repeatability (with Kerk anti-backlash nut) is within 50 micro-inches (1.25 micron) and standard lead accuracy is better than 0.0006-in./in. (mm/ mm)
- Standard lead accuracy of .0006 in/in, with up to .0001 in/in available on selected screws; Contact factory for availability
- Complete in-house manufacturing and quality control assure uniform and consistent products

Kerk Nuts

- Available in 7 standard anti-backlash designs (ZBX, WDG, NTB, KHD, VHD, NTG, ZBA); general purpose BFW Series plus the Mini Series
- Custom nut configurations and mountings are also readily available
- Custom free-wheeling fabricated and molded solutions are available, onsite molding design & production
- The Kerk brand anti-backlash designs provide assemblies which are wear compensating with low frictional drag and exceptional positional repeatability
- Operation to more than 300 million inches of travel can be achieved

Nut and Screw Materials

In addition to the Kerk self-lubricating acetal nut material, we offer a variety of custom compounded **Kerkite® composite polymers**, formulated to provide optimum performance in their target conditions and applications.

- High performance materials
- Exceptional wear properties
- Cost and design advantages afforded through injection molding
- Mechanical, thermal and electrical properties; compatible with many chemicals and environmental conditions: temperature, chemical resistance, radiation resistance, etc.
- Compounded with lubricants, reinforcements and thermoplastic polymers

Kerk brand lead screws and linear rails start with premium grade 303 stainless steel. Kerk stainless steel lead screws are corrosion resistant, non-magnetic, and compatible with many demanding processes. The ideal starting point for a maintenance-free product, this premium quality stainless steel is being used in numerous applications including medical applications, clean rooms, food and human contact, salt spray, cryogenics and vacuum. We can also roll screws in many materials and produce nuts in alternative plastics. If the material can be molded, machined, ground, or rolled, we can likely process it.

Properties of Standard vs. Kerkite Materials			
	Standard Acetal	**Kerkite KN30**	**Kerkite KP20**
Material	Acetal w/Lubrication	Carbon Reinforced Nylon w/Lubrication	Carbon Reinforced PPS w/Lubrication
Color	Black	Blue	Black
Tensile Strength (PSI)	7,000-9,000	24,000-27,000	23,800
Flexural Modulus (PSI)	300,000-450,000	1,750,000	2,500,000
Deflection Temp (°F)	255	485	500
Thermal Exp. Coeff (IN/IN/F)	5.8×10^{-5}	1.1×10^{-5}	0.8×10^{-5}
Constant Use Temp (°F)	150	300	400
Water Absorption (%)	.2	.9	.02
*Coefficient of Friction	.08-.12	.10-.15	.15-.20
**PV Limit (@ 20 IN/SEC) PSI FPM	15,000	43,000	70,000***

Please note the above values are based on polymer industry standards and should be used as reference only. Materials need to be tested in individual applications to ensure that properties will be sufficient.
*The actual value of coefficient of friction will depend on surface finish, environment and any additional lubrication.
**Please note manufacturers vary the PV listed values as well as the way PV is calculated. Please use these numbers for PV as a reference guide between materials. Higher PV materials are available.
***Please consult factory for proper use and alternative PPS materials with higher PV values.

Kerk Lead Screw TFE Coatings

We offer multiple options for lubrication. All Kerk lead screw nuts feature self-lubricating polymers. However, when maximum performance is required, Kerkote® and Black Ice® Teflon TFE coatings provide unmatched results in the most demanding applications. The purpose of TFE coating is to supply a more even distribution of lubricant than is normally found when using standard self-lubricating plastics on steel.

Kerkote TFE Coating

Lubrication to the nut/screw interface occurs by the nut picking up Kerkote® TFE particles from the soft coating as well as from the migration of the internal lubricant within the plastic nut. The lubricant, although solid, has some “spreading” ability as in fluid lubric

- Ideal for most environments (Black Ice recommended for harsh environments)
- Soft coating
- Dry lubricant
- Long term
- Maintenance-free
- Can be re-machined
- Optimized for softer plastics (acetals/nylons), with or without mechanical reinforcement
- Provides maximum level of self-lubrication
- Not intended to be used with additional lubricants
- Should not be used in environments where oils or other lubricant contamination is possible

Black Ice TFE Coating

Hard coating that remains on the screw. Rather than acting as a dry lubricant, it is an anti-friction coating whose surface properties displace the metal to which it is applied.

- Ideal for harsh environments or if reduced friction and a permanent coating is desired
- Hard coating
- Long term
- Maintenance free
- Low friction surface upon which the nut travels
- Exceptionally durable with virtually any type of polymer nut
- Not intended for use with metal or glass fiber reinforced nuts, although can withstand abrasion from contamination, rigid polymer systems, fluid impingement and wash down applications
- Not intended to be used with additional lubricants

Greases

Teflon TFE coatings are intended to be used without additional lubricants. However, there are certain applications where external lubrication may be desired. These include the use of nut materials such as glass reinforced plastic or metal. We offer a selection of greases developed specifically for these applications.

Lead Screw Nut Selection

Kerk Lead Screw Assemblies are modified acme thread forms optimized for performance and available in a broad range of lead screw diameters, leads and nut styles, custom designed for your application. Kerk lead screws are self-adjusting, maintenance-free and require no lubrication. Providing maximum accuracy, high reliability, smooth, quiet operation and low cost, Kerk lead screw assemblies are your best choice for high performance linear motion control.

Nut Styles										
			• = Good •• = Better ••• = Best							
		Units								
			ZBX	ZBA	ZBM	KHD	WDG	NTB	VHD	BFW
Max Dynamic Load		lb	35	55	1	20	75	200	350	500
		N	155	245	4.4	89	333	890	1557	2224
Compactness			••	••	•••	••	•••	••	•	•••
Typical Drag Torque			••	••	••	•••	••	••	•••	N/A
Vibration Damping	[horizontal]		•••	•••	•••	••	•	•	••	N/A
	[vertical]		•••	•••	•••	•	•	•	•	N/A
Smoothness			••	•••	••	••	••	••	••	•
Backlash Compensation			••	•	••	•••	•••	•••	•••	N/A
Drag Adujusted			N/A	•••	N/A	••	N/A	•	••	N/A
Stiffness			••	••	••	•••	•••	•••	•••	N/A
Easy to Modify			••	•	•	•	•	•••	•	•••
Custom Materials Available			••	••	•	•	•	•••	•	•••
Best for Fine Leads		<.2”,5mm	•••	•••	•••	•••	•••	•	•••	•••
Best for Long Leads		>1”,25mm	•••	•••	N/A	•••	•••	•••	•••	•••

Lead Screw by Size

Kerk Lead Screws utilize the latest in precision rolling technology. Lead screws are available in standard diameters from 5/64” to 15/16” and includes metric and left hand threads. Most standard lead screws are manufactured from 303 stainless steel and are produced using our exclusive precision rolling process. Other lead screw materials are available for application specific requirements.

Dynamic Load by Nut Type										
Diameter	**Lead Range**	**Units**	**ZBX**	**ZBA**	**ZBM**	**KHD**	**WDG**	**NTB**	**VHD**	**BFW**
5/64 inch (2mm)	0.012-0.079 in (0.3-2.00 mm)	lbs N			1 (4.4)					10 (44)
1/8 inch (3.2mm)	0.024-0.125 in (0.61-3.18 mm)							5 (22)		25 (111)
0.132 inch (3.3mm)	0.020-0.315 in (0.50-8.00 mm)							5 (22)		25 (111)
9/64 inch (3.6mm)	0.012-0.394 in (0.30-10.00 mm)							5 (22)		25 (111)
5/32 inch (4mm)	0.033-0.500 in (0.84-12.70 mm)							5 (22)		25 (111)
3/16 inch (5mm)	0.020-0.050 in (0.50-12.70 mm)						10 (44)	5 (22)		25 (111)
7/32 inch (5.6mm)	0.024-0.384 in (0.61-9.75 mm)						10 (44)	5 (22)		25 (111)
1/4 inch (6mm)	0.024-1.000 in (0.61-25.4 mm)		5 (22)	5 (22)			10 (44)	10 (44)		50 (222)
5/16 inch (8mm)	0.039-0.800 in (1.00-20.32 mm)		10 (44)	10 (44)		20 (89)	25 (111)	20 (89)		75 (334)
3/8 inch (10mm)	0.025-1.500 in (0.64-38.10 mm)		10 (44)	10 (44)		20 (89)	25 (111)	20 (89)		75 (334)
7/16 inch (11mm)	0.050-0.615 in (1.27-15.62 mm)		15 (67)	15 (67)			75 (334)	30 (133)		90 (400)
1/2 inch (13mm)	0.050-2.000 in (1.27-50.80 mm)		25 (111)	25 (111)			75 (334)	100 (445)	150 (667)	150 (667)
5/8 inch (16mm)	0.100-2.000 in (2.54-50.80 mm)		35 (156)	35 (156)				125 (556)	250 (1112)	225 (1001)
3/4 inch (19mm)	0.0625-3.622 in (1.59-92.00 mm)			55 (245)				150 (667)	350 (1557)	350 (1557)
7/8 inch (22mm)	0.200-1.000 in (5.08-25.4 mm)			55 (245)				200 (890)	350 (1557)	500 (2224)
15/16 inch (24mm)	0.050-3.000 in (1.27-76.20 mm)			55 (245)				200 (890)		500 (2224)

Terminology

Screw Accuracy

HKP uses a unique precision rolling process for screw manufacturing. Standard lead accuracy for Kerk screws is .0006 in.Jin. (mm/mm). Lead accuracies are available up to .0001 in.Jin. (mm/mm). Please consult the factory for higher lead accuracies. Assemblies have an extremely high bi-directional repeatability of 50 micro-inches (1.25 micron).

End Machining

HKP can custom machine screws to your specifications or provide cut-to-length screws for your own machining.

Critical Speed

This is the rotational speed at which a screw may experience vibration or other dynamic problems. See CRITICAL SPEED CHART to determine if application parameters result in speed approaching critical. To minimize critical speed problems: use a longer lead, choose a larger diameter or increase bearing mount support.

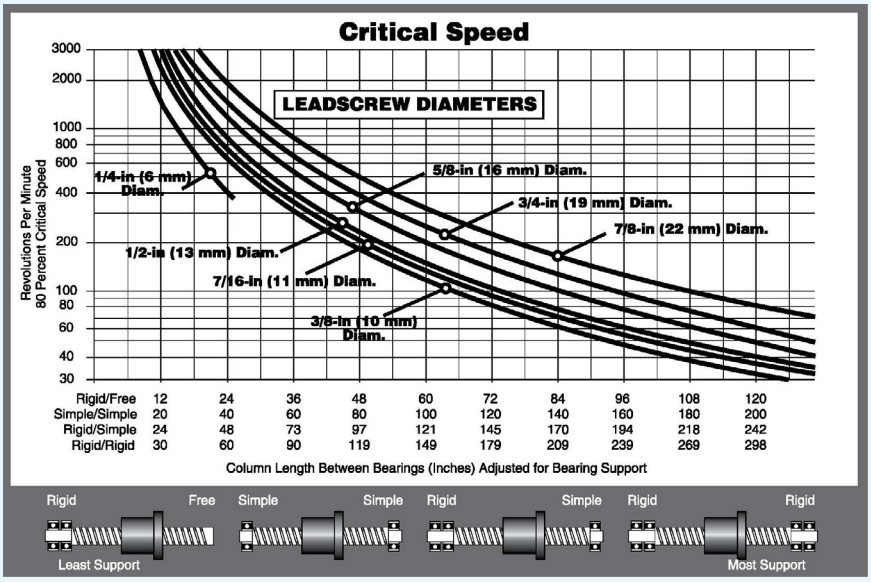

Lengths

Lengths can be specified up to 12 ft. (4M) from stock, (depending on diameter and lead). Cut to length screws are offered in 6-in increments (6-in, 12, 18, ...) + 1.0-in/-0-in.

Lead

Advancement per revolution. All screws are listed by lead, not pitch. ***Lead = Pitch x Number of Starts***

Pitch

Crest-to-crest distance or one divided by threads per inch. (On a multiple start thread, the pitch equals the lead divided by the number of starts.)

Traverse Speed

The nut materials we use provide long wear-life over a wide variety of conditions. However, very high loads and/or speeds will accelerate nut wear. Special materials may be required for these situations. We offer the following guidelines for continuous duty linear traversing speeds for optimum life:

Lead	Traverse Speed	Lead	Traverse Speed
1/10 - 1/2-in	4-in/sec	1 - 12 mm	100 mm/sec
1/2 - 1-in	10-in/sec	12 - 25 mm	250 mm/sec
1 - 2 1/2-in	30-in/sec	25 - 60 mm	760 mm/sec

Maximum Load

Although the Kerk Anti-Backlash Assemblies are capable of withstanding relatively high loads without catastrophic failure, these units have been designed to operate under the loading shown in the size charts.

Efficiency

Efficiency is the relationship of work input to work output. It should not be confused with mechanical advantage. Listed efficiencies are theoretical values based on Kerkote TFE coated screws.

Torque

The required motor torque to drive a lead screw assembly is the sum of three components: the **inertial torque**, **drag torque**, and **torque-to-move load**. It must be noted that this is the torque necessary to drive the lead screw assembly alone. Additional torque associated with driving frictional bearings and motor shafts, moving components, and drag due to general assembly misalignment must also be considered.

Inertial Torque: $T_j = I\alpha$ Where I = screw inertia, α = angular acceleration

Drag Torque: The Kerk Anti-Backlash Assemblies are typically supplied with drag torque of 1 to 7 oz.-in. The magnitude of the drag torque is dependent on the standard factory settings or settings specified by the customer. Generally, the higher the preset force, the better the Anti-Backlash characteristics.

Torque-to-Move:

$$T_L = \frac{\text{LOAD x LEAD}}{2\pi \text{ x EFFICIENCY}}$$

Back Driving

Sometimes referred to as reversibility, back driving is the ability of a screw to be turned by a thrust load applied to the nut. Generally, back driving will not occur when the screw lead is less than 1/3 the diameter for uncoated screws or 1/4 the diameter for Kerkote TFE coated screws. For higher leads where back driving is likely, the torque required for holding a load is:

$$T_b = \frac{\text{LOAD x LEAD x BACKDRIVE EFFICIENCY}}{2\pi}$$

Screw Straightness

Screw straightness is measured as Total Indicator Runout(TIR). The standard straightness for lead screws is .003-in/ft. Haydon Kerk Motion Solutions can provide tighter specifications on customer request.

Standard/Block Dimensional Tolerances

Inch	
.X	± .02
.XX	± .010
.XXX	± .005

Metric (mm)	
L < 4	± 0.1
4 < L ≤ 16	± 0.15
16 < L ≤ 63	± 0.2
63 < L ≤ 250	± 0.3

Mechanical Properties

Screw Inertia		
Screw Size	**Screw Inertia**	
inch (mm)	(oz-inch sec2 /inch)	(g-cm2/cm)
5/64 (2)	3.4×10^{-8}	9.5×10^{-4}
1/8 (3.2)	1.8×10^{-7}	5.0×10^{-3}
9/64 (3.5)	3.4×10^{-7}	9.5×10^{-3}
5/32 (3.97)	4.9×10^{-7}	1.4×10^{-2}
3/16 (4.76)	1.1×10^{-6}	3.1×10^{-2}
7/32 (5.55)	1.8×10^{-6}	5.0×10^{-2}
1/4 (6)	3×10^{-5}	8.3×10^{-2}
5/16 (8)	5×10^{-5}	1.4
3/8 (10)	1.5×10^{-5}	0.4
7/16 (11)	3.5×10^{-5}	1.0
1/2 (13)	5.2×10^{-5}	1.4
5/8 (16)	14.2×10^{-5}	3.9
3/4 (19)	30.5×10^{-5}	8.5
7/8 (22)	58.0×10^{-5}	16.1
15/16 (24)	73.0×10^{-5}	20.3

Anti-Backlash Life		
Series	**Without Kerkote® TFE Coating** inch (cm)	**With Kerkote® TFE Coating** inch (cm)
ZBA	5 to 10 million (12 to 25 million)	15 to 40 million (38 to 100 million)
ZBX	40 to 60 million (100 to 150 million)	150 to 200 million (380 to 500 million)
KHD	80 to 100 million (200 to 250 million)	180 to 230 million (450 to 580 million)
WDG	100 to 125 million (250 to 315 million)	200 to 250 million (500 to 635 million)
NTB	100 to 125 million (250 to 315 million)	200 to 250 million (500 to 635 million)
VHD	200 to 225 million (500 to 570 million)	300 to 350 million (760 to 880 million)
BFW	N/A, Typical Backlash .003 to .010 (.076 to .25)	N/A, Typical Backlash .003 to .010 (.076 to .25)
NTG	5 to 10 million (12 to 25 million)	15 to 40 million (38 to 100 million)

Anti-backlash life is defined as the nut's ability to compensate for wear while maintaining its zero backlash properties. Above life data is based on 25% of the dynamic load rating. NTB style does not include mini series sizes. Life will vary with loading, operating environment, and duty cycle. The longer screw leads generally provide longer life.

Lead Screw	
Material	**Surface Finish**
303 Stainless Steel (options available)	Better than 16 micro-inches (0.4 µm)

Nuts		
Material	**Tensile Strength**	**Coefficient of Expansion**
Polyacetal with Lubricating Additive	9,700 psi	6.0×10^{-5} in/in/°F

*Other Kerkite materials available

Assembly			
Standard Operating Temp. Range	**Coefficent of Friction**		
32 - 200° F* (0 - 93° C)*	**Polyacetal Nut to Screw**	Static = .08 Dynamic = .15	.08 ** .09 **
-40 - 311° F (-40 - 155° C)	**Polyester/Fiberglass Nut to Screw*** **	Static = .07 Dynamic = .08	

* Very high or low temperatures may cause significant changes in the nut fit or drag torque. Please call Haydon Kerk Motion Solutions for optional temperature range materials.
** with Kerkote® TFE Coating
*** This material is only recommended to be used with grease, Coefficent of Friction numbers are with HSS-06 grease

Grease Compatibility Chart

		Lubrication Coatings	
Nut Type	**Grease**	**Kerkote®**	**Black Ice®**
ZBX	Yes		
ZBA	Yes		
KHD	No	Yes	
VHD	No	Yes	
WDG	No	Yes	
BFW	Yes		
NTB	No	Yes	
NTG	Yes		

Anti-Backlash Nuts

Haydon Kerk offers a renowned portfolio of anti-backlash designs that create lead screw assemblies which are wear compensating, with low frictional drag and exceptional positional repeatability. Seven standard anti-backlash nut styles cover the range of axial, radial and torsional designs to suit a wide range of applications. Haydon Kerk provides nuts in a wide range of wear resistant, self-lubricating thermoplastic materials.

Anti-Backlash Technology

Axial Take-up Mechanism

The standard method for taking up backlash is to bias two nut halves axially using some type of compliant spring. (Wavy washer, compression spring, rubber washer, etc.) The unit is very stiff in the direction in which the nut half is loaded against the flank of the screw thread. However, in the direction away from the screw thread, the nut is only as axially stiff as the amount of preload which the spring exerts.

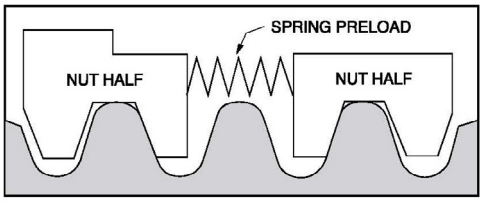

For example, if the maximum axial load to which the system is subjected is 50 lbs., the amount of spring preload must be equal to, or greater than, 50 lbs. in order to maintain intimate screw/nut contact. The problems arising from preloading in this manner are increased drag torque and nut wear. Obviously, the higher the load at the screw/nut interface, the higher the required torque to drive the nut on the screw and the more susceptible the unit is to nut wear.

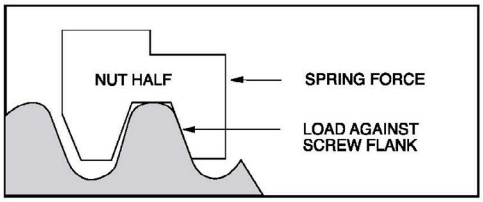

An alternate method replaces the spring with a stiff spacer sized to fit exactly between the two nut halves. There is no excessive preload force at the interface and the unit is capable of carrying high axial loads in either direction with no backlash. This is fine initially. However, as use time increases, wear begins on the nut threads causing a gap to develop between the spacer (L) and the nut halves.

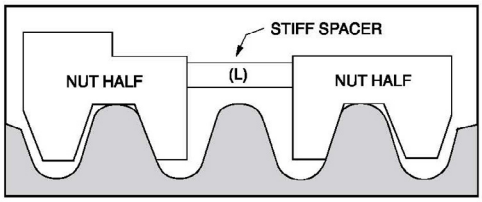

This gap (1 + LI2) is now the amount of backlash which has developed in the unit. This backlash can be removed by replacing the stiff spacer with a new spacer equal to (L + 1 +LI2). This process, although effective, would be extremely costly and difficult to implement on a continuous basis.

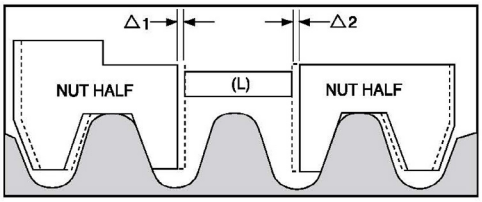

The Solution

What is needed, then, is a stiff spacer which will continually expand to accommodate the wear which occurs during use. This is done by creating a spacer threaded at one end with a complimentary nut torsionally biased to advance when a gap develops. The thread at the end of the spacer is a fine helix such that an axial load will not backdrive the nut once spacer growth has occurred. The preload on the unit is only the amount necessary to turn the spacer nut on the spacer rod and is independent of the external system loadings. We thus have a self-wear compensating unit which has extremely low frictional drag torque yet high axial stiffness.

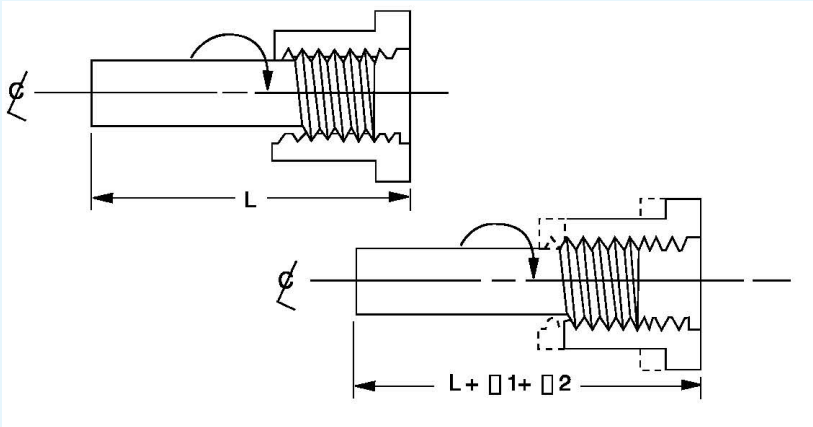

KHD Nut Series

Eliminates the need for load compensating preload forces. The KHD Series anti-backlash assembly makes use of the Kerk patented AXIAL TAKE-UP MECHANISM (see Lead screw Assemblies: Anti-Backlash Technologies section) to provide backlash compensation. The unique split nut with torsional take-up provides increased load capacity and axial stiffness over comparably sized ZBX units. Although the KHD offers high axial stiffness, frictional drag torque (1-3 oz.-in.) is very low. The anti-backlash mechanism in the KHD unit eliminates the need for load compensating preload forces. The assembly consists of a 303 stainless steel screw mated with a self-lubricating polyacetal nut. End machining to customer specifications and Kerkote® TFE screw coating are optional.

KHD Series Nut Assemblies

Technical Data

Material	Polyacetal, Lubricant Additive
Tensile Strength	9,700 psi
Coefficient of Expansion	6.0 x 10 –5 in/in/°F
Coefficent of Friction Polyacetal Nut to Screw	Static = .08 .08 ** Dynamic = .15 .09 **
Standard Operating Temperature Range	32 - 200° F* (0 - 93° C)*

* Very high or low temperatures may cause significant changes in the nut fit or drag torque. Please call the HKP Engineering Team at 603 213 6290 for optional temperature range materials.
** with Kerkote® TFE Coating.

Grease Compatibility

Coatings	Compatible
Kerkote® TFE Coating	YES
Black Ice® TFE Coating	YES
Grease	NO

Anti-Backlash Life

Without Kerkote® TFE Coating inch / (cm)	With Kerkote® TFE Coating inch / (cm)
80 to 100 million (200 to 250 million)	180 to 230 million (450 to 580 million)

Anti-backlash life is defined as the nut's ability to compensate for wear while maintaining its zero backlash properties. Above life data is based on 25% of the dynamic load rating. Life will vary with loading, operating environment, and duty cycle. The longer screw leads generally provide longer life.

Identifying the KHD Series Nut Part Number Codes when Ordering

KHD	A	K	R	—	031	—	0039	—	XXXX
Prefix	**Nut Mounting Style**	**Lubrication**	**Thread Direction**		**Diameter Code**		**Nominal Thread Lead Code**		**Unique Identifier**
KHD	**A** = Flanged (Triangular) **T** = Threaded **X** = Custom	**S** = Uncoated **K** = Kerkote® TFE Coating **N** = Nut only **B** = Black Ice® TFE Coating	**R** = Right hand **L** = Left hand (Not Available for Micro Series) (Refer to lead screw charts for availability		**031** = .313 in (8 mm) **037** = .375 in (10 mm)		(Refer to LEAD CODE Specifications chart, page 3)		Proprietary suffix assigned to a specific customer application. The identifier can apply to either a standard or custom part.

NOTE: Dashes must be included in Part Number (–) as shown above. For assistance call our Engineering Team at 603 213 6290.

Dimensional Drawings

KHDA Flange Mount

KHDA Flange Mount	Screw Diam. A inch (mm)	Nut Diam. B inch (mm)	Nut Length C inch (mm)	Flange Diam. D inch (mm)	Flange Thickness E inch (mm)	Thread M* inch	Thread Length N inch (mm)	Dynamic Load lbs (Kg)	Drag Torque oz-in (N-m)
	5/16 (8)	.80 (20.3)	2.2	.75 (19.1)	.05 (1.27)	3/4-20	.35 (8.9)	20 (10)	1-3 (.007-.020)
	3/8 (10)	.80 (20.3)	(55.9)	.75 (19.1)	.05 (1.27)	3/4-20	.35 (8.9)	20 (10)	1-3 (.007-.020)

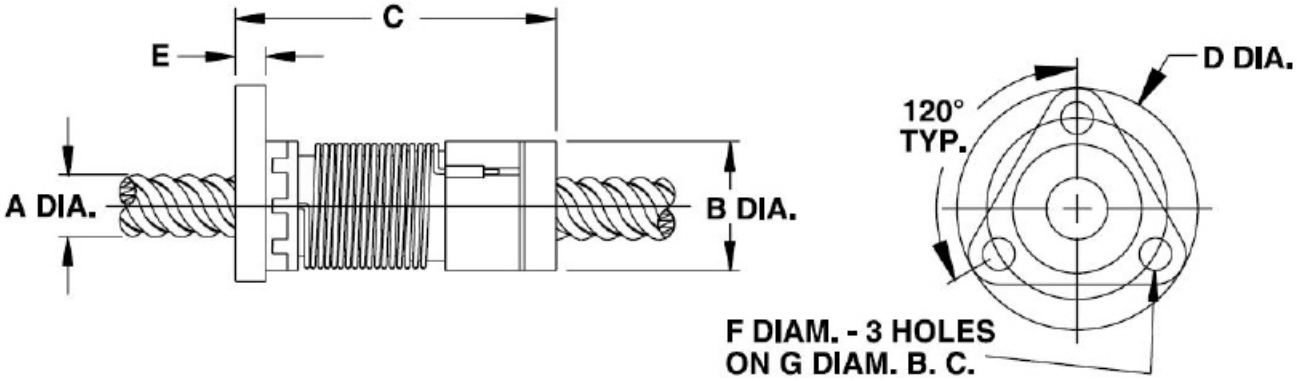

KHDT Thread Mount

KHDT Thread Mount	Screw Diam. A inch (mm)	Nut Diam. B inch (mm)	Nut Length C inch (mm)	Flange Diam. D inch (mm)	Flange Thickness E inch (mm)	Thread M* inch	Thread Length N inch (mm)	Dynamic Load** lbs (Kg)	Drag Torque oz-in (N-m)
	5/16 (8)	.80 (20.3)	2.2 (55.9)	.75 (19.1)	.05 (1.27)	3/4-20	.35 (8.9)	20 (10)	1-3 (.007-.020)
	3/8 (10)	.80 (20.3)	2.2 (55.9)	.75 (19.1)	.05 (1.27)	3/4-20	.35 (8.9)	20 (10)	1-3 (.007-.020)

Metric numbers are for reference only.

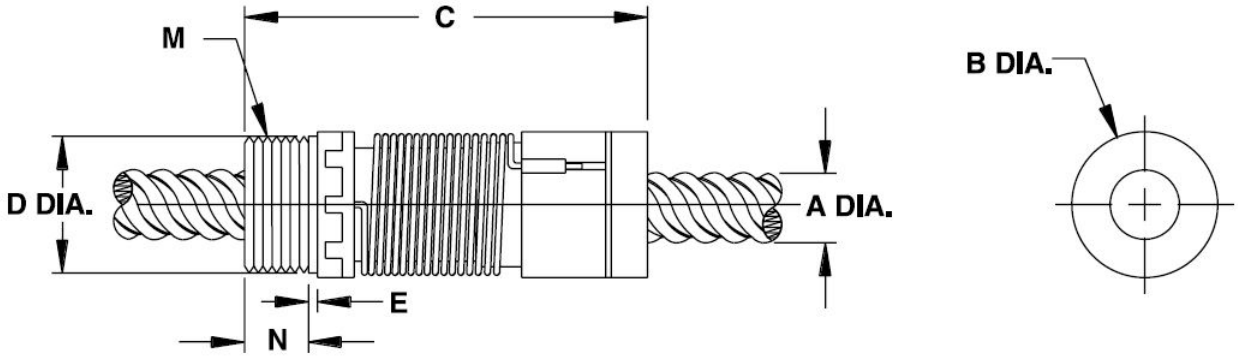

Dimensional Tolerances			
Inches		Metric (mm)	
.X	± .02	< L 4	± 0.1
.XX	± .010	4 < L ≤ 16	± 0.15
.XXX	± .005	16 < L ≤ 63	± 0.2
		63 < L ≤ 250	± 0.3

Lead Screw Compatibility: KHD Series

Diameter		Diameter Code	Lead		LEAD CODE	Left Hand Available	Outside Diameter (for reference)		Root Diameter (for reference)		Efficiency %*
inches	mm		inches	mm			inches	mm	inches	mm	
5/16	8	031	0.039	1.00	**0039**		0.315	8.00	0.261	6.63	34
			0.057	1.44	**0057**		0.315	8.00	0.243	6.17	43
			0.0741	1.88	**0074**		0.312	7.92	0.211	5.36	51
			0.111	2.82	**0111**		0.312	7.92	0.232	5.89	60
			0.167	4.24	**0167**		0.312	7.92	0.211	5.36	69
			0.250	6.35	**0250**		0.312	7.92	0.234	5.94	76
			0.500	12.70	**0500**		0.312	7.92	0.232	5.89	83
			0.800	20.32	**0800**		0.306	7.77	0.243	6.17	86
3/8	10	037	0.025	0.64	**0025**		0.375	9.53	0.337	8.56	21
			0.039	1.00	**0039**		0.394	10.01	0.350	8.89	28
			0.04167	1.06	**0042**		0.375	9.53	0.320	8.13	34
			0.050	1.27	**0050**	•	0.375	9.53	0.301	7.65	36
			0.055	1.40	**0055**		0.375	9.53	0.303	7.70	38
			0.059	1.50	**0059**	•	0.389	9.88	0.313	7.95	38
			0.0625	1.59	**0063**	•	0.388	9.86	0.295	7.49	41
			0.068	1.73	**0068**		0.388	9.86	0.295	7.49	42
			0.079	2.00	**0079**		0.375	9.53	0.264	6.71	47
			0.0833	2.12	**0083**		0.375	9.53	0.293	7.44	48
			0.100	2.54	**0100**	•	0.375	9.53	0.266	6.76	53
			0.125	3.18	**0125**	•	0.375	9.53	0.295	7.49	59
			0.157	4.00	**0157**		0.375	9.53	0.274	6.96	65
			0.1667	4.23	**0167**		0.371	9.42	0.261	6.63	61
			0.197	5.00	**0197**		0.375	9.53	0.266	6.76	69
			0.200	5.08	**0200**	•	0.375	9.53	0.266	6.76	69
			0.250	6.35	**0250**		0.375	9.53	0.268	6.81	70
			0.300	7.62	**0300**		0.375	9.53	0.255	6.48	76
			0.333	8.46	**0333**		0.375	9.53	0.245	6.22	78
			0.363	9.22	**0363**	•	0.375	9.53	0.260	6.60	79
			0.375	9.53	**0375**		0.375	9.53	0.265	6.73	79
			0.394	10.00	**0394**		0.375	9.53	0.260	6.60	79
			0.400	10.16	**0400**		0.375	9.53	0.293	7.44	79
			0.472	12.00	**0472**		0.388	9.86	0.287	7.29	82
			0.500	12.70	**0500**	•	0.388	9.86	0.265	6.73	81
			0.667	16.94	**0667**		0.375	9.53	0.273	6.93	83
			0.667	19.05	**0750**		0.388	9.86	0.273	6.93	84
			0.984	25.00	**0984**		0.375	9.53	0.262	6.65	84
			1.000	25.40	**1000**		0.383	9.73	0.254	6.45	84
			1.200	30.48	**1200**	•	0.383	9.73	0.254	6.45	84
			1.250	31.75	**1250**		0.375	9.53	0.278	7.06	84
			1.500	38.10	**1500**		0.375	9.53	0.264	6.71	83

Shaded areas have been translated from their designed inch or mm dimension to an equivalent mm or inch dimension.

* Listed efficiencies are theoretical values based on Kerkote® TFE coated lead screw
** Listed efficiencies for Micro screws are theoretical values based on non-coated lead screws
***Back-drive threshold is 50±10%

NTB Nut Series

For higher load applications. The NTB Series anti-backlash assembly is designed for higher load applications than the ZBX or KHD series units. Using the specially designed take up mechanism, it maintains axial stiffness throughout its life while system torque is held to a minimum. The need to highly pre-load the nut to compensate for load has been eliminated with the Kerk NTB Series assembly.

The nut is manufactured with a self-lubricating polyacetal designed to run efficiently on the precision rolled shafting. Screws are 303 stainless and are available with the proprietary long - life Kerkote® TFE coating. The NTB's simple, compact design can be easily modified for custom applications.

The NTB assembly provides low drag torque, high system stiffness, smooth operation, and long life throughout its load and speed range.

NTB Mini Nut Series

Miniature style asemblies, with an "anti-backlash" function. The Mini Series brings Haydon Kerk quality, precision and value to products that were previously off limits to lead screw technology.

NTB Series Nut Assembies

Technical Data

Material	Polyacetal, Lubricant Additive
Tensile Strength	9,700 psi
Coefficient of Expansion	6.0 x 10 –5 in/in/°F
Coefficent of Friction Polyacetal Nut to Screw	Static = .08 .08 ** Dynamic = .15 .09 **
Standard Operating Temperature Range	32 - 200° F* (0 - 93° C)*

* Very high or low temperatures may cause significant changes in the nut fit or drag torque. Please call the HKP Engineering Team at 603 213 6290 for optional temperature range materials.
** with Kerkote® TFE Coating.

Anti-Backlash Life

Without Kerkote® TFE Coating inch / (cm)	With Kerkote® TFE Coating inch / (cm)
100 to 125 million (250 to 315 million)	200 to 250 million (500 to 635 million)

Anti-backlash life is defined as the nut's ability to compensate for wear while maintaining its zero backlash properties. Above life data is based on 25% of the dynamic load rating. Life will vary with loading, operating environment, and duty cycle. The longer screw leads generally provide longer life.

Grease Compatibility

Coatings	Compatible
Kerkote® TFE Coating	YES
Black Ice® TFE Coating	YES
Grease	NO

Identifying the NTB Series Nut Part Number Codes when Ordering

NTB	T	K	R	—	025	—	0050	—	XXXX
Prefix	**Nut Mounting Style**	**Lubrication**	**Thread Direction**		**Diameter Code**		**Nominal Thread Lead Code**		**Unique Identifier**
NTB	**A** = Flanged (Triangular) **F** = Flanged (Round) **T** = Threaded **X** = Custom Mini Series Only: **B** = Barrel [m] **R** = Rectangular [m] [m] **NTB Mini Series**	**S =** Uncoated **K =** Kerkote® TFE Coating **N =** Nut only **B =** Black Ice® TFE Coating	**R =** Right hand **L =** Left hand (Not Available for Micro Series) (Refer to lead screw charts for availability		**012[m]** = .125 in (3.2 mm) **013[m]** = .133 in (3.3 mm) **014[m]** = .141 in (3.6 mm) **016[m]** = .156 in (4 mm) **018[m]** = .188 in (5 mm) **021[m]** = .219 in (5.6 mm) **025** = .250 in (6 mm) **031** = .313 in (8 mm) [m] **NTB Mini Series**		(Refer to LEAD CODE Specifications charts, pages 4 to 8)		Proprietary suffix assigned to a specific customer application. The identifier can apply to either a standard or custom part.

NOTE: Dashes must be included in Part Number (–) as shown above. For assistance call our Engineering Team at 603 213 6290.

Dimensional Drawings

NTB Flange Mount

	Screw Diam. A inch (mm)	Nut Diam. B inch (mm)	Nut Length C inch (mm)	Flange Diam. D inch (mm)	Flange Thickness E inch (mm)	Mounting Hole Diam. F inch (mm)	Bolt Circle Diam. G inch (mm)	Hub Width H inch (mm)	Hub Diam. J inch (mm)	Dynamic Load lbs (Kg)	Drag Torque oz-in (N-m)
NTBA Trianular-Flange	1/4 (6)	.52 (13.2)	1.1 (28)	1.00 (25.4)	.16 (4.0)	.143 (3.63)	.750 (19.1)	.08 (2.0)	.500 (12.7)	10 (4.5)	.5-2 (.004-.014)
	5/16 (8)	.80 (20.3)	1.8 (46)	1.50 (38.1)	.20 (5.1)	.200 (5.08)	1.125 (28.6)	.10 (2.54)	.750 (19.1)	20 (9.1)	1-3 (.007-.02)
	3/8 (10)	.80 (20.3)	1.8 (46)	1.50 (38.1)	.20 (5.1)	.200 (5.08)	1.125 (28.6)	.10 (2.54)	.750 (19.1)	20 (9.1)	1-3 (.007-.02)
	7/16 (11)	.90 (22.9)	1.8 (46)	1.62 (41.2)	.23 (5.7)	.200 (5.08)	1.125 (28.6)	.10 (2.54)	.875 (22.2)	30 (13.6)	1-3 (.007-.02)

Metric numbers are for reference only.

	Screw Diam. A inch (mm)	Nut Diam. B inch (mm)	Nut Length C inch (mm)	Flange Diam. D inch (mm)	Flange Thickness E inch (mm)	Mounting Hole Diam. F inch (mm)	Bolt Circle Diam. G inch (mm)	Hub Width H inch (mm)	Hub Diam. J inch (mm)	Dynamic Load lbs (Kg)	Drag Torque oz-in (N-m)
NTBF Round Flange	1/2 (13)	1.06 (26.9)	2.1 (54)	1.75 (44.5)	.25 (6.4)	.220 (5.59)	1.406(35.71)	.12 (3.0)	1.00 (25.4)	100 (45.5)	2-6 (.014-.04)
	5/8 (16)	1.38 (34.9)	2.3 (59)	2.13 (54.1)	.28 (7.0)	.220 (5.59)	1.750(44.45)	.10 (2.54)	1.25 (31.8)	125 (56.8)	2-6 (.014-.04)
	3/4 (19)	1.56 (39.6)	2.7 (67)	2.38 (60.5)	.31 (7.9)	.220 (5.59)	2.000 (50.80)	.10 (2.54)	1.50 (38.1)	150 (68.2)	3-7 (.02-.05)
	7/8 (22)	1.75 (44.5)	2.8 (70)	2.63 (66.8)	.38 (9.5)	.220 (5.59)	2.250 (57.15)	.12 (3.0)	1.75 (44.5)	200 (90.9)	4-8 (.03-.06)
	15/16 (24)	1.75 (44.5)	2.8 (70)	2.63 (66.8)	.38 (9.5)	.220 (5.59)	2.250 (57.15)	.12 (3.0)	1.75 (44.5)	200 (90.9)	4-8 (.03-.06)

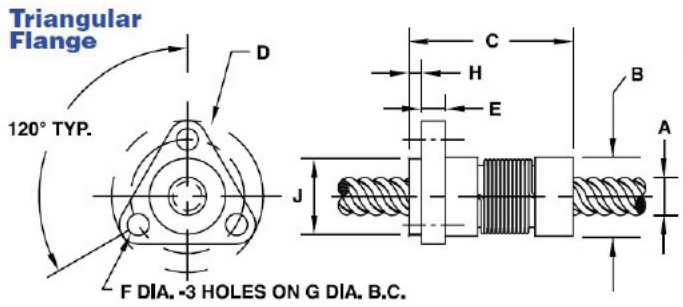

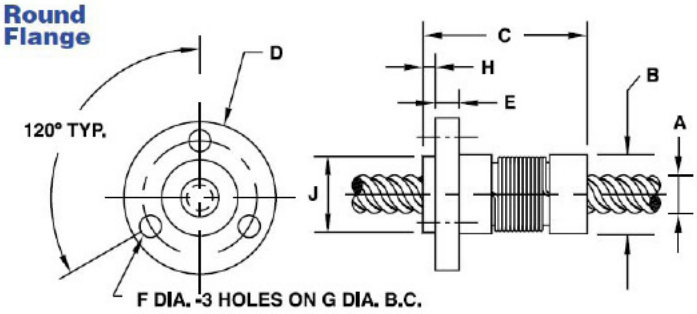

NTB Thread Mount

	Screw Diam. A inch (mm)	Nut Diam. B inch (mm)	Nut Length C inch (mm)	Thread M* inch	Thread Length N inch (mm)	Dynamic Load** lbs (Kg)	Drag Torque oz-in (N-m)
NTBT Thread Mount	1/8 (3)	.40 (10.2)	.50 (28)	3/8-24	1.25 (3.18)	5 (2.3)	.5 (.004)
	1/4 (6)	.52 (13.2)	1.1 (28)	7/16-20	.25 (6.4)	10 (4.5)	.5-2 (.004-.014)
	5/16 (8)	.80 (20.3)	1.8 (45)	3/4-20	.38 (9.5)	20 (9.1)	1-3 (.007 -.02)
	3/8 (10)	.80 (20.3)	1.8 (45)	3/4-20	.38 (9.5)	20 (9.1)	1-3 (.007 -.02)
	7/16 (11)	.90 (22.9)	1.8 (46)	13/16-16	.38 (9.5)	30 (13.6)	1-3 (.007 -.02)
	1/2 (13)	1.06 (26.9)	2.1 (54)	15/16-16	.38 (9.5)	100 (45.5)	2-6 (.014-.04)
	5/8 (16)	1.38 (34.9)	2.3 (59)	1 1/8-16	.38 (9.5)	125 (56.8)	2-6 (.014-.04)
	3/4 (19)	1.56 (39.6)	2.7 (67)	1 3/8-16	.50 (12.7)	150 (68.2)	3-7 (.02-.05)
	7/8 (22)	1.75 (44.5)	2.8 (70)	1 9/16-16	.50 (12.7)	200 (90.9)	4-8 (.03-.06)
	15/16 (24)	1.75 (44.5)	2.8 (70)	1 9/16-16	.50 (12.7)	200 (90.9)	4-8 (.03-.06)

Dimensional Tolerances			
Inches		Metric (mm)	
.X	± .02	< L 4	± 0.1
.XX	± .010	4 < L ≤ 16	± 0.15
.XXX	± .005	16 < L ≤ 63	± 0.2
		63 < L ≤ 250	± 0.3

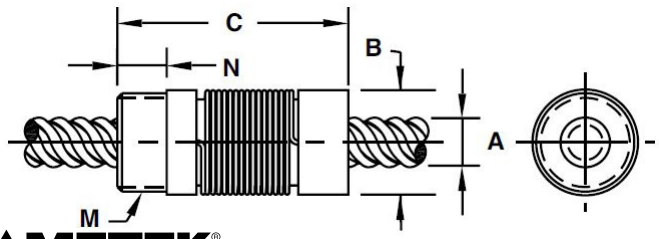

NTB Mini Flange Mount

NTBR Flange Mount	Screw Diam. A inch (mm)	Nut Diam. B inch (mm)	Nut Length C inch (mm)	Flange Height D1 inch (mm)	Flange Diam. D inch (mm)	Flange Thickness E inch (mm)	Mounting Hole Diam. F inch (mm)	Bolt Circle Diam. G inch (mm)	Dynamic Load lbs (Kg)	Drag Torque oz-in (N-m)
	1/8 inch through 7/32 inch (3 mm through 5.6 mm)	0.40 (10.2)	0.50 (13)	0.40 (10.2)	0.75 (19.1)	0.13 (3.2)	0.120 (3.05)	0.600 (15.24)	5 (2.3)	0.5 (.004)

Metric numbers are for reference only.

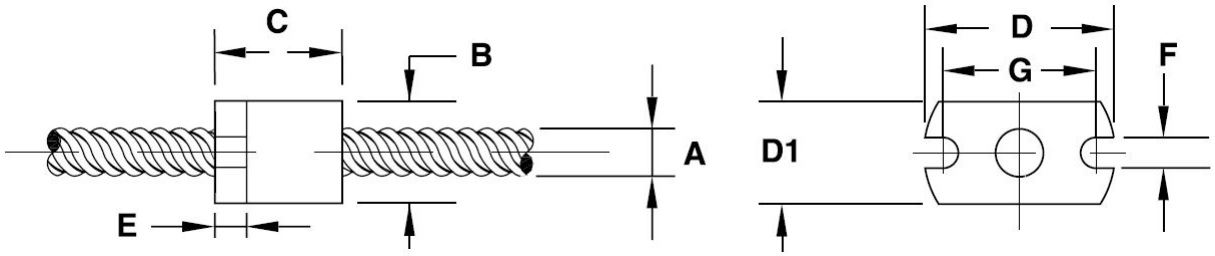

NTB Mini Thread Mount

NTBT Thread Mount	Screw Diam. A inch (mm)	Nut Diam. B inch (mm)	Nut Length C inch (mm)	Thread M* inch	Thread Length N inch (mm)	Dynamic Load** lbs (Kg)	Drag Torque oz-in (N-m)
	1/8 inch through 7/32 inch (3 mm through 5.6 mm)	0.40 (10.2)	0.50 (13)	3/8-24	1.25 (3.18)	5 (2.3)	0.5 (.004)

Metric numbers are for reference only.

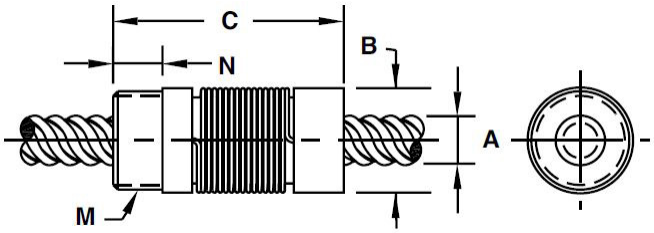

Lead Screw Compatibility: NTB Series

Diameter		Diameter Code	Lead		LEAD CODE	Left Hand Available	Outside Diameter (for reference)		Root Diameter (for reference)		Efficiency %*
inches	mm		inches	mm			inches	mm	inches	mm	
1/8	3.2	012	0.024	0.61	**0024**		0.129	3.28	0.093	2.36	44
			0.039	1.00	**0039**		0.129	3.28	0.094	2.39	57
			0.048	1.22	**0048**		0.129	3.28	0.093	2.36	61
			0.075	1.91	**0075**		0.129	3.28	0.093	2.36	70
			0.096	2.44	**0096**	•	0.129	3.28	0.093	2.36	75
			0.125	3.18	**0125**	LH Only	0.125	3.18	0.078	1.98	80
.132	3.3	013	0.020	0.50	**0020**		0.132	3.35	0.104	2.64	42
			0.039	1.00	**0039**		0.132	3.35	0.080	2.03	61
			0.079	2.00	**0079**		0.132	3.35	0.080	2.03	75
			0.157	4.00	**0157**		0.132	3.35	0.080	2.03	84
			0.315	8.00	**0315**		0.132	3.35	0.080	2.03	87
9/64	3.6	014	0.012	0.30	**0012**		0.140	3.56	0.123	3.12	26
			0.024	0.61	**0024**		0.140	3.56	0.105	2.67	43
			0.048	1.22	**0048**		0.140	3.56	0.081	2.06	62
			0.096	2.44	**0096**		0.140	3.56	0.081	2.06	75
			0.394	10.00	**0394**		0.140	3.56	0.102	2.59	86
5/32	4	016	0.033	0.84	**0033**	•	0.156	3.96	0.116	2.95	45
			0.050	1.27	**0050**	LH Only	0.156	3.96	0.096	2.44	59
			0.094	2.39	**0094**		0.164	4.17	0.128	3.25	67
			0.125	3.18	**0125**		0.168	4.27	0.130	3.30	74
			0.250	6.35	**0250**		0.156	3.96	0.130	3.30	83
			0.375	9.53	**0375**		0.156	3.96	0.130	3.30	85
			0.500	12.70	**0500**		0.156	3.96	0.130	3.30	86
316	5	018	0.020	0.50	**0020**		0.188	4.78	0.163	4.14	30
			0.025	0.64	**0025**		0.188	4.78	0.150	3.81	39
			0.039	1.00	**0039**		0.188	4.78	0.144	3.66	47
			0.050	1.27	**0050**		0.188	4.78	0.124	3.15	58
			0.100	2.54	**0100**		0.188	4.78	0.136	3.45	69
			0.1875	4.76	**0188**		0.188	4.78	0.167	4.24	78
			0.200	5.08	**0200**		0.188	4.78	0.124	3.15	82
			0.375	9.53	**0375**		0.188	4.78	0.161	4.09	84
			0.400	10.16	**0400**		0.188	4.78	0.124	3.15	84
			0.427	10.85	**0427**		0.188	4.78	0.162	4.11	85
			0.500	12.70	**0500**	•	0.188	4.78	0.142	3.61	86

Shaded areas have been translated from their designed inch or mm dimension to an equivalent mm or inch dimension.

* Listed efficiencies are theoretical values based on Kerkote® TFE coated lead screw
** Listed efficiencies for Micro screws are theoretical values based on non-coated lead screws
***Back-drive threshold is 50±10%

Lead Screw Compatibility: NTB Series

Diameter		Diameter Code	Lead		LEAD CODE	Left Hand Available	Outside Diameter (for reference)		Root Diameter (for reference)		Efficiency %*
inches	mm		inches	mm			inches	mm	inches	mm	
7/32	5.6	021	0.024	0.61	**0024**		0.218	5.54	0.181	4.60	31
			0.03125	0.79	**0031**		0.204	5.18	0.160	4.06	39
			0.048	1.22	**0048**		0.216	5.49	0.156	3.96	50
			0.050	1.27	**0050**		0.200	5.08	0.135	3.43	52
			0.0625	1.59	**0063**		0.218	5.54	0.142	3.61	60
			0.096	2.44	**0096**		0.218	5.54	0.156	3.96	66
			0.192	4.88	**0192**		0.218	5.54	0.156	3.96	78
			0.250	6.35	**0250**	•	0.204	5.18	0.140	3.56	81
			0.384	9.75	**0384**		0.218	5.54	0.159	4.04	86
1/4	6	025	0.024	0.61	**0024**		0.250	6.35	0.218	5.54	28
			0.025	0.64	**0025**		0.250	6.35	0.214	5.44	30
			0.03125	0.79	**0031**		0.250	6.35	0.208	5.28	34
			0.039	1.00	**0039**		0.250	6.35	0.190	4.83	40
			0.048	1.22	**0048**		0.250	6.35	0.190	4.83	45
			0.050	1.27	**0050**	•	0.250	6.35	0.191	4.85	46
			0.059	1.50	**0059**		0.250	6.35	0.172	4.37	52
			0.0625	1.59	**0063**		0.250	6.35	0.170	4.32	52
			0.079	2.00	**0079**		0.250	6.35	0.170	4.32	59
			0.096	2.44	**0096**		0.250	6.35	0.190	4.83	61
			0.100	2.54	**0100**		0.250	6.35	0.190	4.83	62
			0.118	3.00	**0118**		0.250	6.35	0.175	4.45	68
			0.125	3.18	**0125**		0.250	6.35	0.190	4.83	67
			0.197	5.00	**0197**		0.250	6.35	0.172	4.37	72
			0.200	5.08	**0200**		0.250	6.35	0.170	4.32	65
			0.250	6.35	**0250**	•	0.250	6.35	0.168	4.27	79
			0.3125	7.94	**0313**		0.250	6.35	0.184	4.67	81
			0.333	8.46	**0333**		0.250	6.35	0.170	4.32	82
			0.394	10.00	**0394**		0.250	6.35	0.170	4.32	78
			0.400	10.16	**0400**		0.250	6.35	0.170	4.32	84
			0.500	12.70	**0500**	•	0.250	6.35	0.169	4.29	85
			0.750	19.05	**0750**		0.250	6.35	0.170	4.32	86
			1.000	25.40	**1000**	•	0.250	6.35	0.170	4.32	84
5/16	8	031	0.039	1.00	**0039**		0.315	8.00	0.261	6.63	34
			0.057	1.44	**0057**		0.315	8.00	0.243	6.17	43
			0.0741	1.88	**0074**		0.312	7.92	0.211	5.36	51
			0.111	2.82	**0111**		0.312	7.92	0.232	5.89	60
			0.167	4.24	**0167**		0.312	7.92	0.211	5.36	69
			0.250	6.35	**0250**		0.312	7.92	0.234	5.94	76
			0.500	12.70	**0500**		0.312	7.92	0.232	5.89	83
			0.800	20.32	**0800**		0.306	7.77	0.243	6.17	86

Shaded areas have been translated from their designed inch or mm dimension to an equivalent mm or inch dimension.

* Listed efficiencies are theoretical values based on Kerkote® TFE coated lead screw
** Listed efficiencies for Micro screws are theoretical values based on non-coated lead screws
***Back-drive threshold is 50±10%

Lead Screw Compatibility: NTB Series

Diameter		Diameter Code	Lead		LEAD CODE	Left Hand Available	Outside Diameter (for reference)		Root Diameter (for reference)		Efficiency %*
inches	mm		inches	mm			inches	mm	inches	mm	
3/8	10	037	0.025	0.64	**0025**		0.375	9.53	0.337	8.56	21
			0.039	1.00	**0039**		0.394	10.01	0.350	8.89	28
			0.04167	1.06	**0042**		0.375	9.53	0.320	8.13	34
			0.050	1.27	**0050**	•	0.375	9.53	0.301	7.65	36
			0.055	1.40	**0055**		0.375	9.53	0.303	7.70	38
			0.059	1.50	**0059**	•	0.389	9.88	0.313	7.95	38
			0.0625	1.59	**0063**	•	0.388	9.86	0.295	7.49	41
			0.068	1.73	**0068**		0.388	9.86	0.295	7.49	42
			0.079	2.00	**0079**		0.375	9.53	0.264	6.71	47
			0.0833	2.12	**0083**		0.375	9.53	0.293	7.44	48
			0.100	2.54	**0100**	•	0.375	9.53	0.266	6.76	53
			0.125	3.18	**0125**	•	0.375	9.53	0.295	7.49	59
			0.157	4.00	**0157**		0.375	9.53	0.274	6.96	65
			0.1667	4.23	**0167**		0.371	9.42	0.261	6.63	61
			0.197	5.00	**0197**		0.375	9.53	0.266	6.76	69
			0.200	5.08	**0200**	•	0.375	9.53	0.266	6.76	69
			0.250	6.35	**0250**		0.375	9.53	0.268	6.81	70
			0.300	7.62	**0300**		0.375	9.53	0.255	6.48	76
			0.333	8.46	**0333**		0.375	9.53	0.245	6.22	78
			0.363	9.22	**0363**	•	0.375	9.53	0.260	6.60	79
			0.375	9.53	**0375**		0.375	9.53	0.265	6.73	79
			0.394	10.00	**0394**		0.375	9.53	0.260	6.60	79
			0.400	10.16	**0400**		0.375	9.53	0.293	7.44	79
			0.472	12.00	**0472**		0.388	9.86	0.287	7.29	82
			0.500	12.70	**0500**	•	0.388	9.86	0.265	6.73	81
			0.667	16.94	**0667**		0.375	9.53	0.273	6.93	83
			0.667	19.05	**0750**		0.388	9.86	0.273	6.93	84
			0.984	25.00	**0984**		0.375	9.53	0.262	6.65	84
			1.000	25.40	**1000**		0.383	9.73	0.254	6.45	84
			1.200	30.48	**1200**	•	0.383	9.73	0.254	6.45	84
			1.250	31.75	**1250**		0.375	9.53	0.278	7.06	84
			1.500	38.10	**1500**		0.375	9.53	0.264	6.71	83
7/16	11	043	0.050	1.27	**0050**		0.437	11.10	0.362	9.19	30
			0.0625	1.59	**0063**	•	0.436	11.07	0.358	9.09	38
			0.079	2.00	**0079**		0.472	11.99	0.374	9.50	42
			0.111	2.82	**0111**		0.437	11.10	0.327	8.31	52
			0.118	3.00	**0118**		0.438	11.13	0.363	9.22	52
			0.125	3.18	**0125**		0.438	11.13	0.357	9.07	54
			0.197	5.00	**0197**		0.438	11.13	0.315	8.00	65
			0.236	6.00	**0236**		0.433	11.00	0.313	7.95	70
			0.250	6.35	**0250**		0.442	11.23	0.325	8.26	70
			0.307	7.80	**0307**		0.445	11.30	0.343	8.71	73
			0.325	8.26	**0325**		0.444	11.28	0.342	8.69	74
			0.394	10.00	**0394**		0.446	11.33	0.331	8.41	78
			0.472	12.00	**0472**		0.438	11.13	0.318	8.08	80
			0.500	12.70	**0500**		0.452	11.48	0.327	8.31	80
			0.615	15.62	**0615**		0.475	12.07	0.376	9.55	82

Lead Screw Compatibility: NTB Series

Diameter		Diameter Code	Lead		LEAD CODE	Left Hand Available	Outside Diameter (for reference)		Root Diameter (for reference)		Efficiency %*
inches	mm		inches	mm			inches	mm	inches	mm	
1/2	13	050	0.050	1.27	**0050**		0.495	12.57	0.433	11.00	29
			0.079	2.00	**0079**		0.473	12.01	0.355	9.02	41
			0.098	2.50	**0098**		0.500	12.70	0.383	9.73	46
			0.100	2.54	**0100**	•	0.490	12.45	0.364	9.25	46
			0.125	3.18	**0125**		0.500	12.70	0.374	9.50	51
			0.157	4.00	**0157**		0.500	12.70	0.384	9.75	58
			0.160	4.06	**0160**		0.500	12.70	0.388	9.86	67
			0.1667	4.23	**0167**		0.500	12.70	0.384	9.75	58
			0.197	5.00	**0197**		0.500	12.70	0.365	9.27	62
			0.200	5.08	**0200**	•	0.492	12.50	0.366	9.30	63
			0.250	6.35	**0250**		0.500	12.70	0.382	9.70	67
			0.333	8.46	**0333**	•	0.497	12.62	0.362	9.19	73
			0.394	10.00	**0394**		0.497	12.62	0.362	9.19	76
			0.400	10.16	**0400**		0.497	12.62	0.364	9.25	76
			0.500	12.70	**0500**		0.488	12.40	0.352	8.94	79
			0.630	16.00	**0630**		0.500	12.70	0.374	9.50	80
			0.750	19.05	**0750**		0.525	13.34	0.399	10.13	83
			0.800	20.32	**0800**		0.500	12.70	0.370	9.40	83
			0.984	25.00	**0984**		0.500	12.70	0.369	9.37	84
			1.000	25.40	**1000**	•	0.490	12.45	0.372	9.45	84
			1.500	38.10	**1500**		0.490	12.45	0.374	9.50	85
			2.000	50.80	**2000**		0.488	12.40	0.378	9.60	87
5/8	16	062	0.100	2.54	**0100**		0.615	15.62	0.498	12.65	40
			0.125	3.18	**0125**	•	0.625	15.88	0.470	11.94	45
			0.200	5.08	**0200**		0.625	15.88	0.495	12.57	53
			0.250	6.35	**0250**		0.625	15.88	0.469	11.91	63
			0.315	8.00	**0315**		0.627	15.93	0.493	12.52	68
			0.410	10.41	**0410**	•	0.625	15.88	0.481	12.22	72
			0.500	12.70	**0500**	•	0.625	15.88	0.478	12.14	76
			0.630	16.00	**0630**		0.625	15.88	0.491	12.47	78
			1.000	25.40	**1000**		0.625	15.88	0.481	12.22	83
			1.500	38.10	**1500**		0.625	15.88	0.499	12.67	85
			1.575	40.00	**1575**	•	0.625	15.88	0.499	12.67	86
			2.000	50.80	**2000**	•	0.625	15.88	0.499	12.67	86

Shaded areas have been translated from their designed inch or mm dimension to an equivalent mm or inch dimension.

* Listed efficiencies are theoretical values based on Kerkote® TFE coated lead screw
** Listed efficiencies for Micro screws are theoretical values based on non-coated lead screws
***Back-drive threshold is 50±10%

Lead Screw Compatibility: NTB Series

Diameter		Diameter Code	Lead		LEAD CODE	Left Hand Available	Outside Diameter (for reference)		Root Diameter (for reference)		Efficiency %*
inches	mm		inches	mm			inches	mm	inches	mm	
3/4	19	075	0.0625	1.59	**0063**		0.750	19.05	0.671	17.04	25
			0.098	2.50	**0098**		0.742	18.85	0.626	15.90	35
			0.100	2.54	**0100**	•	0.746	18.95	0.624	15.85	35
			0.1667	4.23	**0167**		0.727	18.47	0.645	16.38	47
			0.197	5.00	**0197**		0.745	18.92	0.624	15.85	51
			0.200	5.08	**0200**		0.741	18.82	0.632	16.05	52
			0.250	6.35	**0250**		0.731	18.57	0.639	16.23	57
			0.276	7.00	**0276**		0.750	19.05	0.624	15.85	59
			0.333	8.46	**0333**		0.750	19.05	0.624	15.85	64
			0.394	10.00	**0394**		0.745	18.92	0.619	15.72	67
			0.500	12.70	**0500**		0.744	18.90	0.624	15.85	73
			0.551	14.00	**0551**		0.750	19.05	0.624	15.85	73
			0.591	15.00	**0591**		0.749	19.02	0.623	15.82	74
			0.709	18.00	**0709**		0.780	19.81	0.650	16.51	77
			0.748	19.00	**0748**		0.672	17.07	0.547	13.89	80
			0.787	20.00	**0787**		0.780	19.81	0.648	16.46	78
			0.800	20.32	**0800**		0.750	19.05	0.618	15.70	79
			0.945	24.00	**0945**	•	0.734	18.64	0.633	16.08	80
			1.000	25.40	**1000**	•	0.743	18.87	0.619	15.72	81
			1.500	38.10	**1500**		0.712	18.08	0.590	14.99	84
			1.969	50.00	**1969**	•	0.751	19.08	0.620	15.75	84
			2.000	50.80	**2000**	•	0.742	18.85	0.611	15.52	84
			2.400	60.96	**2400**	•	0.750	19.05	0.620	15.75	84
			3.622	92.00	**3622**	•	0.750	19.05	0.634	16.10	87
7/8	22	087	0.200	5.08	**0200**	•	0.870	22.10	0.742	18.85	48
			0.236	6.00	**0236**		0.848	21.54	0.773	19.63	52
			0.250	6.35	**0250**		0.875	22.23	0.749	19.02	53
			0.394	10.00	**0394**		0.875	22.23	0.741	18.82	65
			0.500	12.70	**0500**		0.862	21.89	0.744	18.90	69
			0.630	16.00	**0630**		0.875	22.23	0.741	18.82	73
			0.667	16.94	**0667**		0.871	22.12	0.745	18.92	74
			0.787	20.00	**0787**		0.875	22.23	0.741	18.82	78
			0.945	24.00	**0945**		0.875	22.23	0.741	18.82	79
			1.000	25.40	**1000**		0.871	22.12	0.742	18.85	80
5/16	24	093	0.050	1.27	**0050**	LH Only	0.938	23.83	0.874	22.20	17
			2.000	50.80	**2000**		0.927	23.55	0.815	20.70	85
			3.000	76.20	**3000**	•	0.939	23.85	0.803	20.40	86

Shaded areas have been translated from their designed inch or mm dimension to an equivalent mm or inch dimension.

* Listed efficiencies are theoretical values based on Kerkote® TFE coated lead screw
** Listed efficiencies for Micro screws are theoretical values based on non-coated lead screws
***Back-drive threshold is 50±10%

NTG Nut Series

Compact size, zero backlash, minimal drag torque. The adjustable NTG Series offers a cost effective anti-backlash assembly for applications requiring precise positional accuracy, repeatability, and smoothness. The NTG has been developed specifically for demanding applications that require zero backlash with minimal drag torque. With its compact size and no moving components, the NTG can also be easily incorporated into customer specified, custom molded parts.

An integral part of the NTG design is the ability to manually adjust the drag torque setting to match specific requirements of the application. This drag torque can also be set at the factory to meet individual customer specifications. This is especially effective with fine leads.

The standard NTG unit utilizes a self-lubricating polyacetal nut on a precision rolled 303 stainless steel screw. End machining to customer specifications and Kerkote® TFE screw coating are optional.

NTG Series Nut Assembly

NTG Mini Series Nut Assembly

NTG Mini Nut Series

The NTG Mini Series brings quality, precision and value to miniature lead screw assemblies that require a small-scale anti-backlash function and control of drag torque.

Technical Data

Material	Polyacetal, Lubricant Additive
Tensile Strength	9,700 psi
Coefficient of Expansion	6.0 x 10 –5 in/in/°F
Coefficent of Friction Polyacetal Nut to Screw	Static = .08 .08 ** Dynamic = .15 .09 **
Standard Operating Temperature Range	32 - 200° F* (0 - 93° C)*

* Very high or low temperatures may cause significant changes in the nut fit or drag torque. Please call the HKP Engineering Team at 603 213 6290 for optional temperature range materials.
** with Kerkote® TFE Coating.

Grease Compatibility

Coatings	Compatible
Kerkote® TFE Coating	YES
Black Ice® TFE Coating	YES
Grease	YES

Anti-Backlash Life

Without Kerkote® TFE Coating inch / (cm)	With Kerkote® TFE Coating inch / (cm)
5 to 10 million (12 to 25 million)	15 to 40 million (38 to 100 million)

Anti-backlash life is defined as the nut's ability to compensate for wear while maintaining its zero backlash properties. Above life data is based on 25% of the dynamic load rating. Life will vary with loading, operating environment, and duty cycle. The longer screw leads generally provide longer life.

Identifying the NTG Series Nut Part Number Codes when Ordering

NTG	A	K	R	—	025	—	0050	—	XXXX
Prefix	**Nut Mounting Style**	**Lubrication**	**Thread Direction**		**Diameter Code**		**Nominal Thread Lead Code**		**Unique Identifier**
NTG	**A** = Flanged (Triangular) **T** = Threaded **X** = Custom Mini Series Only: **B** = Barrel [m] **R** = Rectangular [m]	**S** = Uncoated **K** = Kerkote® TFE Coating **N** = Nut only **B** = Black Ice® TFE Coating	**R** = Right hand **L** = Left hand (Not Available for Micro Series) (Refer to lead screw charts for availability		**012**[m] = .125 in (3.2 mm) **013**[m] = .133 in (3.3 mm) **014**[m] = .141 in (3.6 mm) **016**[m] = .156 in (4 mm) **018**[m] = .188 in (5 mm) **021**[m] = .219 in (5.6 mm) **025** = .250 in (6 mm) **031** = .313 in (8 mm) **037** = .375 in (10 mm) [m] **NTG Mini Series**		(Refer to LEAD CODE Specifications charts, pages 4 to 6)		Proprietary suffix assigned to a specific customer application. The identifier can apply to either a standard or custom part.

NOTE: Dashes must be included in Part Number (–) as shown above. For assistance call our Engineering Team at 603 213 6290.

Dimensional Drawings

NTG Flange Mount

NTGA Flange Mount	Screw Diam. A inch (mm)	Nut Diam. B inch (mm)	Nut Length C inch (mm)	Flange Diam. D inch (mm)	Flange Thickness E inch (mm)	Mounting Hole Diam. F inch (mm)	Bolt Circle Diam. G inch (mm)	Dynamic Load lbs (Kg)	Drag Torque oz-in (N-m)
	1/4 (6)	.52 (13.2)	.8 (20.3)	1.00 (25.4)	.16 (4.0)	.143 (3.63)	.750 (19.1)	10 (4.5)	.5-2 (.004-.014)
	5/16 (8)	.80 (20.3)	1.0 (25.4)	1.50 (38.1)	.20 (5.1)	.197 (5.00)	1.125 (28.6)	20 (9.1)	1-3 (.007-.02)
	3/8 (10)	.80 (20.3)	1.0 (25.4)	1.50 (38.1)	.20 (5.1)	.197 (5.00)	1.125 (28.6)	20 (9.1)	1-3 (.007-.02)

Metric numbers are for reference only.

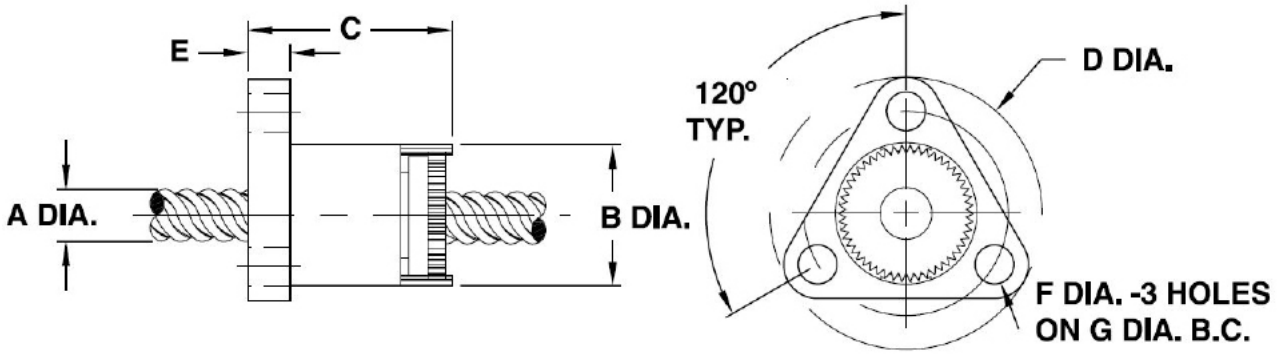

NTG Thread Mount

NTGT Tread Mount	Screw Diam. A inch (mm)	Nut Diam. B inch (mm)	Nut Length C inch (mm)	Thread M* inch	Thread Length N inch (mm)	Dynamic Load** lbs (Kg)	Drag Torque oz-in (N-m)
	1/4 (6)	.520 (13.2)	.9 (22)	7/16 - 20	.250 (6.35)	10 (4.5)	.5-2 (.004-.014)
	5/16 (8)	.800 (20.3)	1.2 (30)	3/4 - 20	.375 (9.53)	20 (9.1)	1-3 (.007-.02)
	3/8 (10)	.800 (20.3)	1.2 (30)	3/4 - 20	.375 (9.53)	20 (9.1)	1-3 (.007-.02)

Metric numbers are for reference only.

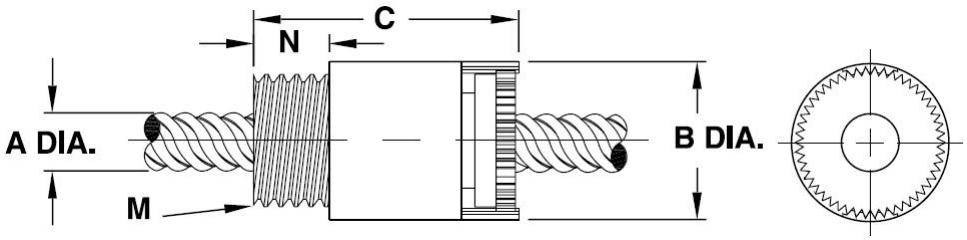

Dimensional Tolerances			
Inches		Metric (mm)	
.X	± .02	< L 4	± 0.1
.XX	± .010	4 < L ≤ 16	± 0.15
.XXX	± .005	16 < L ≤ 63	± 0.2
		63 < L ≤ 250	± 0.3

NTG Mini Flange Mount

NTGR Mini Flange Mount	Screw Diam. A inch (mm)	Nut Diam. B inch (mm)	Nut Length C inch (mm)	Flang Height D1 inch (mm)	Flange Diam. D inch (mm)	Flange Thickness E inch (mm)	Mounting Hole Diam. F inch (mm)	Bolt Circle Diam. G inch (mm)	Dynamic Load lbs (Kg)	Drag Torque oz-in (N-m)
	1/8 inch through 7/32 inch (3 mm through 5.6 mm)	0.40 (10.2)	0.50 (13)	0.40 (10.2)	0.75 (19.1)	0.13 (3.2)	0.120 (3.05)	0.600 (15.24)	5 (2.3)	0.5 (.004)

Metric numbers are for reference only.

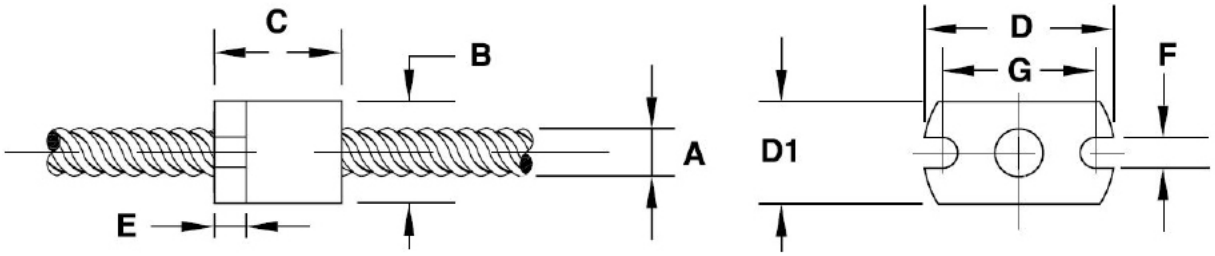

NTG Mini Thread Mount

NTGT Tread Mount	Screw Diam. A inch (mm)	Nut Diam. B inch (mm)	Nut Length C inch (mm)	Thread M* inch	Thread Length N inch (mm)	Dynamic Load** lbs (Kg)	Drag Torque oz-in (N-m)
	1/8 inch through 7/32 inch (3 mm through 5.6 mm)	0.40 (10.2)	0.50 (13)	3/8-24	0.160 (4.06)	5 (2.3)	0.5 (.004)

Metric numbers are for reference only.

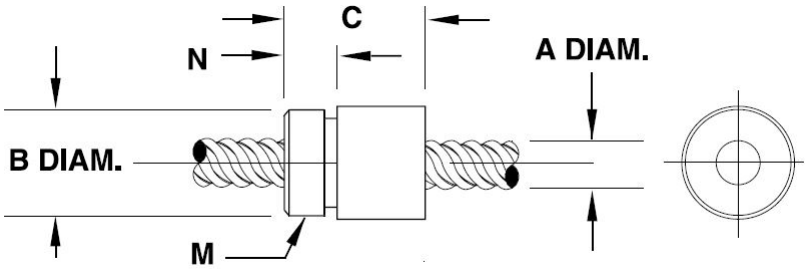

Lead Screw Compatibility: NTG Series

Diameter		Diameter Code	Lead		LEAD CODE	Left Hand Available	Outside Diameter (for reference)		Root Diameter (for reference)		Efficiency %*
inches	mm		inches	mm			inches	mm	inches	mm	
1/8	3.2	012	0.024	0.61	**0024**		0.129	3.28	0.093	2.36	44
			0.039	1.00	**0039**		0.129	3.28	0.094	2.39	57
			0.048	1.22	**0048**		0.129	3.28	0.093	2.36	61
			0.075	1.91	**0075**		0.129	3.28	0.093	2.36	70
			0.096	2.44	**0096**	•	0.129	3.28	0.093	2.36	75
			0.125	3.18	**0125**	LH Only	0.125	3.18	0.078	1.98	80
.132	3.3	013	0.020	0.50	**0020**		0.132	3.35	0.104	2.64	42
			0.039	1.00	**0039**		0.132	3.35	0.080	2.03	61
			0.079	2.00	**0079**		0.132	3.35	0.080	2.03	75
			0.157	4.00	**0157**		0.132	3.35	0.080	2.03	84
			0.315	8.00	**0315**		0.132	3.35	0.080	2.03	87
9/64	3.6	014	0.012	0.30	**0012**		0.140	3.56	0.123	3.12	26
			0.024	0.61	**0024**		0.140	3.56	0.105	2.67	43
			0.048	1.22	**0048**		0.140	3.56	0.081	2.06	62
			0.096	2.44	**0096**		0.140	3.56	0.081	2.06	75
			0.394	10.00	**0394**		0.140	3.56	0.102	2.59	86
5/32	4	016	0.033	0.84	**0033**	•	0.156	3.96	0.116	2.95	45
			0.050	1.27	**0050**	LH Only	0.156	3.96	0.096	2.44	59
			0.094	2.39	**0094**		0.164	4.17	0.128	3.25	67
			0.125	3.18	**0125**		0.168	4.27	0.130	3.30	74
			0.250	6.35	**0250**		0.156	3.96	0.130	3.30	83
			0.375	9.53	**0375**		0.156	3.96	0.130	3.30	85
			0.500	12.70	**0500**		0.156	3.96	0.130	3.30	86
316	5	018	0.020	0.50	**0020**		0.188	4.78	0.163	4.14	30
			0.025	0.64	**0025**		0.188	4.78	0.150	3.81	39
			0.039	1.00	**0039**		0.188	4.78	0.144	3.66	47
			0.050	1.27	**0050**		0.188	4.78	0.124	3.15	58
			0.100	2.54	**0100**		0.188	4.78	0.136	3.45	69
			0.1875	4.76	**0188**		0.188	4.78	0.167	4.24	78
			0.200	5.08	**0200**		0.188	4.78	0.124	3.15	82
			0.375	9.53	**0375**		0.188	4.78	0.161	4.09	84
			0.400	10.16	**0400**		0.188	4.78	0.124	3.15	84
			0.427	10.85	**0427**		0.188	4.78	0.162	4.11	85
			0.500	12.70	**0500**	•	0.188	4.78	0.142	3.61	86
7/32	5.6	021	0.024	0.61	**0024**		0.218	5.54	0.181	4.60	31
			0.03125	0.79	**0031**		0.204	5.18	0.160	4.06	39
			0.048	1.22	**0048**		0.216	5.49	0.156	3.96	50
			0.050	1.27	**0050**		0.200	5.08	0.135	3.43	52
			0.0625	1.59	**0063**		0.218	5.54	0.142	3.61	60
			0.096	2.44	**0096**	•	0.218	5.54	0.156	3.96	66
			0.192	4.88	**0192**		0.218	5.54	0.156	3.96	78
			0.250	6.35	**0250**		0.204	5.18	0.140	3.56	81
			0.384	9.75	**0384**		0.218	5.54	0.159	4.04	86

Shaded areas have been translated from their designed inch or mm dimension to an equivalent mm or inch dimension.

* Listed efficiencies are theoretical values based on Kerkote® TFE coated lead screw
** Listed efficiencies for Micro screws are theoretical values based on non-coated lead screws
***Back-drive threshold is 50±10%

Lead Screw Compatibility: NTG Series

Diameter		Diameter Code	Lead		LEAD CODE	Left Hand Available	Outside Diameter (for reference)		Root Diameter (for reference)		Efficiency %*
inches	mm		inches	mm			inches	mm	inches	mm	
1/4	6	025	0.024	0.61	**0024**		0.250	6.35	0.218	5.54	28
			0.025	0.64	**0025**		0.250	6.35	0.214	5.44	30
			0.03125	0.79	**0031**		0.250	6.35	0.208	5.28	34
			0.039	1.00	**0039**		0.250	6.35	0.190	4.83	40
			0.048	1.22	**0048**		0.250	6.35	0.190	4.83	45
			0.050	1.27	**0050**	•	0.250	6.35	0.191	4.85	46
			0.059	1.50	**0059**		0.250	6.35	0.172	4.37	52
			0.0625	1.59	**0063**		0.250	6.35	0.170	4.32	52
			0.079	2.00	**0079**		0.250	6.35	0.170	4.32	59
			0.096	2.44	**0096**		0.250	6.35	0.190	4.83	61
			0.100	2.54	**0100**		0.250	6.35	0.190	4.83	62
			0.118	3.00	**0118**		0.250	6.35	0.175	4.45	68
			0.125	3.18	**0125**		0.250	6.35	0.190	4.83	67
			0.197	5.00	**0197**		0.250	6.35	0.172	4.37	72
			0.200	5.08	**0200**		0.250	6.35	0.170	4.32	65
			0.250	6.35	**0250**	•	0.250	6.35	0.168	4.27	79
			0.3125	7.94	**0313**		0.250	6.35	0.184	4.67	81
			0.333	8.46	**0333**		0.250	6.35	0.170	4.32	82
			0.394	10.00	**0394**		0.250	6.35	0.170	4.32	78
			0.400	10.16	**0400**		0.250	6.35	0.170	4.32	84
			0.500	12.70	**0500**	•	0.250	6.35	0.169	4.29	85
			0.750	19.05	**0750**		0.250	6.35	0.170	4.32	86
			1.000	25.40	**1000**	•	0.250	6.35	0.170	4.32	84
5/16	8	031	0.039	1.00	**0039**		0.315	8.00	0.261	6.63	34
			0.057	1.44	**0057**		0.315	8.00	0.243	6.17	43
			0.0741	1.88	**0074**		0.312	7.92	0.211	5.36	51
			0.111	2.82	**0111**		0.312	7.92	0.232	5.89	60
			0.167	4.24	**0167**		0.312	7.92	0.211	5.36	69
			0.250	6.35	**0250**		0.312	7.92	0.234	5.94	76
			0.500	12.70	**0500**		0.312	7.92	0.232	5.89	83
			0.800	20.32	**0800**		0.306	7.77	0.243	6.17	86

Shaded areas have been translated from their designed inch or mm dimension to an equivalent mm or inch dimension.

* Listed efficiencies are theoretical values based on Kerkote® TFE coated lead screw
** Listed efficiencies for Micro screws are theoretical values based on non-coated lead screws
***Back-drive threshold is 50±10%

Lead Screw Compatibility: NTG Series

Diameter		Diameter Code	Lead		LEAD CODE	Left Hand Available	Outside Diameter (for reference)		Root Diameter (for reference)		Efficiency %*
inches	mm		inches	mm			inches	mm	inches	mm	
3/8	10	037	0.025	0.64	**0025**		0.375	9.53	0.337	8.56	21
			0.039	1.00	**0039**		0.394	10.01	0.350	8.89	28
			0.04167	1.06	**0042**		0.375	9.53	0.320	8.13	34
			0.050	1.27	**0050**	•	0.375	9.53	0.301	7.65	36
			0.055	1.40	**0055**		0.375	9.53	0.303	7.70	38
			0.059	1.50	**0059**	•	0.389	9.88	0.313	7.95	38
			0.0625	1.59	**0063**	•	0.388	9.86	0.295	7.49	41
			0.068	1.73	**0068**		0.388	9.86	0.295	7.49	42
			0.079	2.00	**0079**		0.375	9.53	0.264	6.71	47
			0.0833	2.12	**0083**		0.375	9.53	0.293	7.44	48
			0.100	2.54	**0100**	•	0.375	9.53	0.266	6.76	53
			0.125	3.18	**0125**	•	0.375	9.53	0.295	7.49	59
			0.157	4.00	**0157**		0.375	9.53	0.274	6.96	65
			0.1667	4.23	**0167**		0.371	9.42	0.261	6.63	61
			0.197	5.00	**0197**		0.375	9.53	0.266	6.76	69
			0.200	5.08	**0200**	•	0.375	9.53	0.266	6.76	69
			0.250	6.35	**0250**		0.375	9.53	0.268	6.81	70
			0.300	7.62	**0300**		0.375	9.53	0.255	6.48	76
			0.333	8.46	**0333**		0.375	9.53	0.245	6.22	78
			0.363	9.22	**0363**	•	0.375	9.53	0.260	6.60	79
			0.375	9.53	**0375**		0.375	9.53	0.265	6.73	79
			0.394	10.00	**0394**		0.375	9.53	0.260	6.60	79
			0.400	10.16	**0400**		0.375	9.53	0.293	7.44	79
			0.472	12.00	**0472**		0.388	9.86	0.287	7.29	82
			0.500	12.70	**0500**	•	0.388	9.86	0.265	6.73	81
			0.667	16.94	**0667**		0.375	9.53	0.273	6.93	83
			0.667	19.05	**0750**		0.388	9.86	0.273	6.93	84
			0.984	25.00	**0984**		0.375	9.53	0.262	6.65	84
			1.000	25.40	**1000**		0.383	9.73	0.254	6.45	84
			1.200	30.48	**1200**	•	0.383	9.73	0.254	6.45	84
			1.250	31.75	**1250**		0.375	9.53	0.278	7.06	84
			1.500	38.10	**1500**		0.375	9.53	0.264	6.71	83

Shaded areas have been translated from their designed inch or mm dimension to an equivalent mm or inch dimension.

* Listed efficiencies are theoretical values based on Kerkote® TFE coated lead screw
** Listed efficiencies for Micro screws are theoretical values based on non-coated lead screws
***Back-drive threshold is 50±10%

VHD Nut Series

The VHD Series anti-backlash assembly provides the maximum load carrying capability and the highest axial and radial stiffness of any Kerk® nut assembly. Designed for smooth, quiet operation and long life, the VHD assembly provides low drag torque by making use of the patented Kerk AXIAL TAKE-UP MECHANISM (see Lead screw Assemblies: Anti-Backlash Technologies section). Drag and wear associated with high pre-load forces are eliminated with the VHD Series. Screws are 303 stainless steel with Kerk's custom Kerkote® TFE extended life coating optional. Assemblies are available cut-to-length or with screws machined to your requirements.

Technical Data

Material	Polyacetal, Lubricant Additive
Tensile Strength	9,700 psi
Coefficient of Expansion	6.0 x 10 –5 in/in/°F
Coefficent of Friction Polyacetal Nut to Screw	Static = .08 .08 ** Dynamic = .15 .09 **
Standard Operating Temperature Range	32 - 200° F* (0 - 93° C)*

* Very high or low temperatures may cause significant changes in the nut fit or drag torque. Please call the HKP Engineering Team at 603 213 6290 for optional temperature range materials.
** with Kerkote® TFE Coating.

Grease Compatibility

Coatings	Compatible
Kerkote® TFE Coating	YES
Black Ice® TFE Coating	YES
Grease	NO

Anti-Backlash Life

Without Kerkote® TFE Coating inch / (cm)	With Kerkote® TFE Coating inch / (cm)
200 to 225 million (500 to 570 million)	300 to 350 million (760 to 880 million)

Anti-backlash life is defined as the nut's ability to compensate for wear while maintaining its zero backlash properties. Above life data is based on 25% of the dynamic load rating. Life will vary with loading, operating environment, and duty cycle. The longer screw leads generally provide longer life.

Identifying the VHD Series Nut Part Number Codes when Ordering

VHD	F	S	R	—	062	—	0125	—	XXXX
Prefix	**Nut Mounting Style**	**Lubrication**	**Thread Direction**		**Diameter Code**		**Nominal Thread Lead Code**		**Unique Identifier**
VHD	**F** = Flanged (Round) **T** = Threaded **X** = Custom	**S** = Uncoated **K** = Kerkote® TFE Coating **N** = Nut only **B** = Black Ice® TFE Coating	**R** = Right hand **L** = Left hand (Not Available for Micro Series) (Refer to lead screw charts for availability		**050** = .500 in (13 mm) **062** = .625 in (16 mm) **075** = .750 in (19 mm) **087** = .875 in (22 mm)		(Refer to LEAD CODE Specifications charts, pages 3 to 4)		Proprietary suffix assigned to a specific customer application. The identifier can apply to either a standard or custom part.

NOTE: Dashes must be included in Part Number (–) as shown above. For assistance call our Engineering Team at 603 213 6290.

Dimensional Drawings

VHD Flange Mount

	Screw Diam. A inch (mm)	Nut Diam. B inch (mm)	Nut Length C inch (mm)	Flange Diam. D inch (mm)	Flange Thickness E inch (mm)	Mounting Hole Diam. F inch (mm)	Bolt Circle Diam. G inch (mm)	Hub Width H inch (mm)	Hub Diam. J inch (mm)	Dynamic Load lbs (Kg)	Drag Torque oz-in (N-m)
VHDF Flange Mount	1/2 (13)	1.12 (28.5)	2.3 (59)	1.75 (44.5)	.23 (5.9)	.22 (5.60)	1.406 (35.71)	.12 (3.1)	.93 (23.62)	150 (68)	2-6 (.014-.02)
	5/8 (16)	1.38 (35.1)	2.6 (66)	2.08 (53)	.28 (7.1)	.22 (5.60)	1.750 (44.45)	N/A	N/A	250 (113)	2-6 (.014-.02)
	3/4 (19)	1.62 (41.2)	2.8 (71)	2.38 (60.5)	.31 (7.9)	.22 (5.60)	2.000 (50.80)	N/A	N/A	350 (159)	3-7 (.02-.05)
	7/8 (22)	1.62 (41.2)	2.8 (71)	2.38 (60.5)	.31 (7.9)	.22 (5.60)	2.000 (50.80)	N/A	N/A	350 (159)	3-7 (.02-.05)

Metric numbers are for reference only.

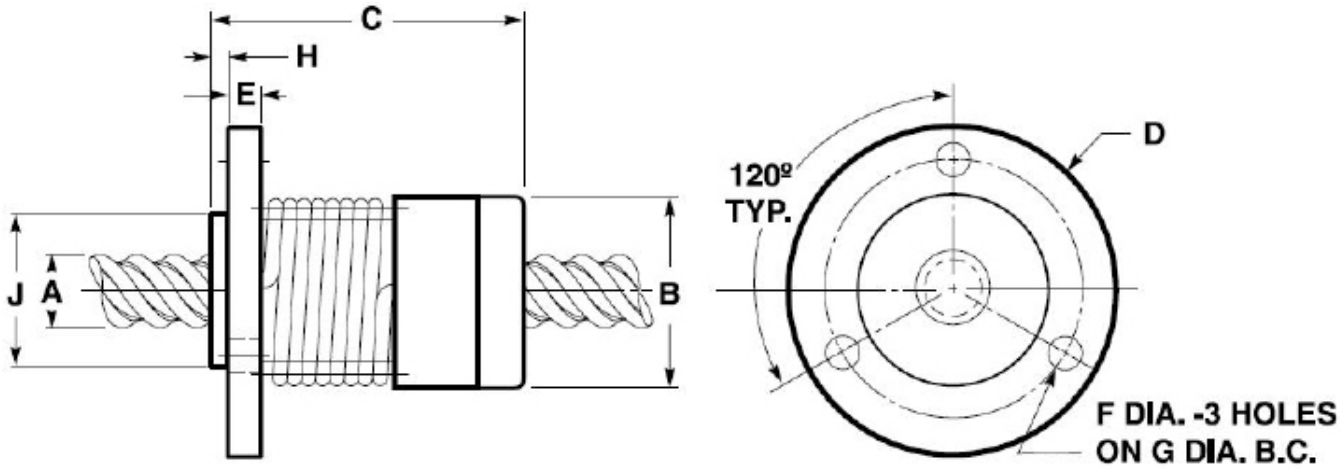

VHD Thread Mount

	Screw Diam. A inch (mm)	Nut Diam. B inch (mm)	Nut Length C inch (mm)	Thread M* inch (mm)	Thread Length N inch (mm)	Dynamic Load** lbs (Kg)	Drag Torque oz-in (N-m)
VHDT Tread Mount	1/2 (13)	1.12 (28.5)	2.5 (64)	15/16-16	.50 (12.7)	150 (68)	2-6 (.014-.04)
	5/8 (16)	1.38 (35.1)	2.8 (72)	1 1/4-16	.50 (12.7)	250 (113)	2-6 (.014-.04)
	3/4 (19)	1.62 (41.2)	3.12 (79)	1 3/8-16	.50 (12.7)	350 (159)	3-7 (.02-.05)
	7/8 (22)	1.62 (41.2)	3.12 (79)	1 3/8-16	.50 (12.7)	350 (159)	3-7 (.02-.05)

Metric numbers are for reference only.

Dimensional Tolerances			
Inches		Metric (mm)	
.X	± .02	< L 4	± 0.1
.XX	± .010	4 < L ≤ 16	± 0.15
.XXX	± .005	16 < L ≤ 63	± 0.2
		63 < L ≤ 250	± 0.3

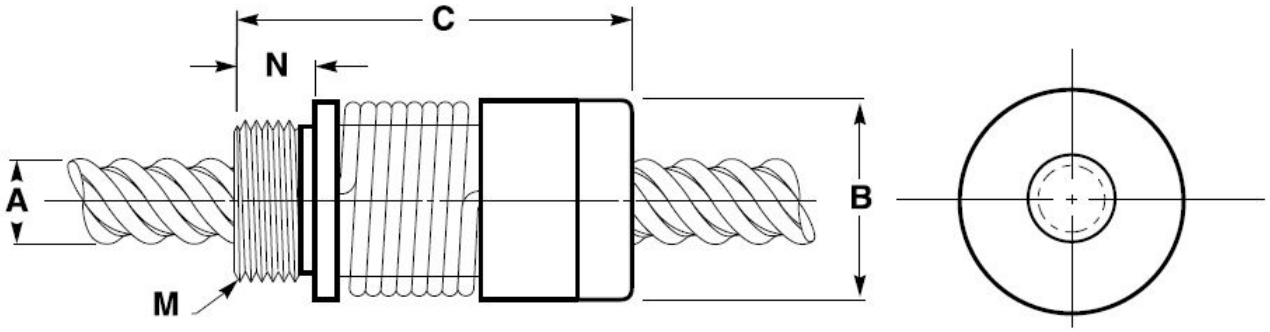

Lead screw Compatibility: VHD Series

Diameter		Diameter Code	Lead		LEAD CODE	Left Hand Available	Outside Diameter (for reference)		Root Diameter (for reference)		Efficiency %*
inches	mm		inches	mm			inches	mm	inches	mm	
1/2	13	050	0.050	1.27	**0050**		0.495	12.57	0.433	11.00	29
			0.079	2.00	**0079**		0.473	12.01	0.355	9.02	41
			0.098	2.50	**0098**		0.500	12.70	0.383	9.73	46
			0.100	2.54	**0100**	•	0.490	12.45	0.364	9.25	46
			0.125	3.18	**0125**		0.500	12.70	0.374	9.50	51
			0.157	4.00	**0157**		0.500	12.70	0.384	9.75	58
			0.160	4.06	**0160**		0.500	12.70	0.388	9.86	67
			0.1667	4.23	**0167**		0.500	12.70	0.384	9.75	58
			0.197	5.00	**0197**		0.500	12.70	0.365	9.27	62
			0.200	5.08	**0200**	•	0.492	12.50	0.366	9.30	63
			0.250	6.35	**0250**		0.500	12.70	0.382	9.70	67
			0.333	8.46	**0333**	•	0.497	12.62	0.362	9.19	73
			0.394	10.00	**0394**		0.497	12.62	0.362	9.19	76
			0.400	10.16	**0400**		0.497	12.62	0.364	9.25	76
			0.500	12.70	**0500**		0.488	12.40	0.352	8.94	79
			0.630	16.00	**0630**		0.500	12.70	0.374	9.50	80
			0.750	19.05	**0750**		0.525	13.34	0.399	10.13	83
			0.800	20.32	**0800**		0.500	12.70	0.370	9.40	83
			0.984	25.00	**0984**		0.500	12.70	0.369	9.37	84
			1.000	25.40	**1000**	•	0.490	12.45	0.372	9.45	84
			1.500	38.10	**1500**		0.490	12.45	0.374	9.50	85
			2.000	50.80	**2000**		0.488	12.40	0.378	9.60	87
5/8	16	062	0.100	2.54	**0100**		0.615	15.62	0.498	12.65	40
			0.125	3.18	**0125**	•	0.625	15.88	0.470	11.94	45
			0.200	5.08	**0200**		0.625	15.88	0.495	12.57	53
			0.250	6.35	**0250**		0.625	15.88	0.469	11.91	63
			0.315	8.00	**0315**		0.627	15.93	0.493	12.52	68
			0.410	10.41	**0410**	•	0.625	15.88	0.481	12.22	72
			0.500	12.70	**0500**	•	0.625	15.88	0.478	12.14	76
			0.630	16.00	**0630**		0.625	15.88	0.491	12.47	78
			1.000	25.40	**1000**		0.625	15.88	0.481	12.22	83
			1.500	38.10	**1500**		0.625	15.88	0.499	12.67	85
			1.575	40.00	**1575**	•	0.625	15.88	0.499	12.67	86
			2.000	50.80	**2000**	•	0.625	15.88	0.499	12.67	86

Shaded areas have been translated from their designed inch or mm dimension to an equivalent mm or inch dimension.

* Listed efficiencies are theoretical values based on Kerkote® TFE coated lead screw
** Listed efficiencies for Micro screws are theoretical values based on non-coated lead screws
***Back-drive threshold is 50±10%

Lead Screw Compatibility: VHD Series

Diameter		Diameter Code	Lead		LEAD CODE	Left Hand Available	Outside Diameter (for reference)		Root Diameter (for reference)		Efficiency %*
inches	mm		inches	mm			inches	mm	inches	mm	
3/4	19	075	0.0625	1.59	**0063**		0.750	19.05	0.671	17.04	25
			0.098	2.50	**0098**		0.742	18.85	0.626	15.90	35
			0.100	2.54	**0100**	•	0.746	18.95	0.624	15.85	35
			0.1667	4.23	**0167**		0.727	18.47	0.645	16.38	47
			0.197	5.00	**0197**		0.745	18.92	0.624	15.85	51
			0.200	5.08	**0200**		0.741	18.82	0.632	16.05	52
			0.250	6.35	**0250**		0.731	18.57	0.639	16.23	57
			0.276	7.00	**0276**		0.750	19.05	0.624	15.85	59
			0.333	8.46	**0333**		0.750	19.05	0.624	15.85	64
			0.394	10.00	**0394**		0.745	18.92	0.619	15.72	67
			0.500	12.70	**0500**		0.744	18.90	0.624	15.85	73
			0.551	14.00	**0551**		0.750	19.05	0.624	15.85	73
			0.591	15.00	**0591**		0.749	19.02	0.623	15.82	74
			0.709	18.00	**0709**		0.780	19.81	0.650	16.51	77
			0.748	19.00	**0748**		0.672	17.07	0.547	13.89	80
			0.787	20.00	**0787**		0.780	19.81	0.648	16.46	78
			0.800	20.32	**0800**		0.750	19.05	0.618	15.70	79
			0.945	24.00	**0945**	•	0.734	18.64	0.633	16.08	80
			1.000	25.40	**1000**	•	0.743	18.87	0.619	15.72	81
			1.500	38.10	**1500**		0.712	18.08	0.590	14.99	84
			1.969	50.00	**1969**	•	0.751	19.08	0.620	15.75	84
			2.000	50.80	**2000**	•	0.742	18.85	0.611	15.52	84
			2.400	60.96	**2400**	•	0.750	19.05	0.620	15.75	84
			3.622	92.00	**3622**	•	0.750	19.05	0.634	16.10	87
7/8	22	087	0.200	5.08	**0200**	•	0.870	22.10	0.742	18.85	48
			0.236	6.00	**0236**		0.848	21.54	0.773	19.63	52
			0.250	6.35	**0250**		0.875	22.23	0.749	19.02	53
			0.394	10.00	**0394**		0.875	22.23	0.741	18.82	65
			0.500	12.70	**0500**		0.862	21.89	0.744	18.90	69
			0.630	16.00	**0630**		0.875	22.23	0.741	18.82	73
			0.667	16.94	**0667**		0.871	22.12	0.745	18.92	74
			0.787	20.00	**0787**		0.875	22.23	0.741	18.82	78
			0.945	24.00	**0945**		0.875	22.23	0.741	18.82	79
			1.000	25.40	**1000**		0.871	22.12	0.742	18.85	80

Shaded areas have been translated from their designed inch or mm dimension to an equivalent mm or inch dimension.

* Listed efficiencies are theoretical values based on Kerkote® TFE coated lead screw
** Listed efficiencies for Micro screws are theoretical values based on non-coated lead screws
***Back-drive threshold is 50±10%

WDG Nut Series

An economical anti-backlash nut assembly that provides precise positional accuracy and repeatability.

The WDG Series anti-backlash assembly utilizes an exceptionally compact design to provide stiffness and balanced accuracy for precise positioning. The unique wedge design locks the nut at the correct preload without excessive drag.

Shorter than other self-compensating nuts with similar performance, the WDG nut permits the design of smaller assemblies without sacrificing stroke length. Nut wear or momentary overload is accommodated through the WDG Series' compensation mechanism, which maintains positional accuracy in demanding applications.

WDG Series Nut Assembly

Highlights

- Compact Size, Moderate Load
- Cost Effective

Grease Compatibility

Coatings	Compatible
Kerkote® TFE Coating	YES
Black Ice® TFE Coating	YES
Grease	NO

Anti-Backlash Life

Without Kerkote® TFE Coating inch / (cm)	With Kerkote® TFE Coating inch / (cm)
100 to 125 million (250 to 315 million)	200 to 250 million (500 to 635 million)

Anti-backlash life is defined as the nut's ability to compensate for wear while maintaining its zero backlash properties. Above life data is based on 25% of the dynamic load rating. Life will vary with loading, operating environment, and duty cycle. The longer screw leads generally provide longer life.

Technical Data

Material	Polyacetal, Lubricant Additive
Tensile Strength	9,700 psi
Coefficient of Expansion	6.0 x 10 –5 in/in/°F
Coefficent of Friction Polyacetal Nut to Screw	Static = .08 .08 ** Dynamic = .15 .09 **
Standard Operating Temperature Range	32 - 200° F* (0 - 93° C)*

* Very high or low temperatures may cause significant changes in the nut fit or drag torque. Please call the HKP Engineering Team at 603 213 6290 for optional temperature range materials.
** with Kerkote® TFE Coating.

Identifying the WDG Series Nut Part Number Codes when Ordering

WDG	A	K	R	—	018	—	0039	—	XXXX
Prefix	**Nut Mounting Style**	**Lubrication**	**Thread Direction**		**Diameter Code**		**Nominal Thread Lead Code**		**Unique Identifier**
WDG	**A** = Flanged (Triangular) **P** = Flange (Triangular with pilot) **T** = Threaded Micro Series **X =** Custom	**S =** Uncoated **K =** Kerkote® TFE Coating **N =** Nut only **B =** Black Ice® TFE Coating	**R =** Right hand **L =** Left hand (Refer to lead screw charts for availability		**018** = .188 in (5 mm) **021** = .219 in (5.6 mm) **025 =** .250 in (6 mm) **031 =** .313 in (8 mm) **037 =** .375 in (10 mm) **043 =** .438 in (11 mm) **050 =** .500 in (13 mm)		(Refer to LEAD CODE Specifications charts, pages 3 to 5)		Proprietary suffix assigned to a specific customer application. The identifier can apply to either a standard or custom part.

NOTE: Dashes must be included in Part Number (–) as shown above. For assistance call our Engineering Team at 603 213 6290.

Dimensional Drawings

WDG Flange Mount and with pilot

	Screw Diam. A inch (mm)	Nut Diam. B inch (mm)	Nut Length C inch (mm)	Flange Diam. D inch (mm)	Flange Thickness E inch (mm)	Mounting Hole Diam. F inch (mm)	Bolt Circle Diam. G inch (mm)	Hub Length H inch (mm)	Hub Diam. J inch (mm)	Dynamic Load lbs (Kg)	Drag Torque oz-in (N-m)
WDGA Flange Mount & WDGP (with pilot)	3/16 (4)	0.625 (16)	1.05 (26.6)	1.125 (28.6)	0.160 (4.1)	0.143 (3.7)	0.875 (22.2)	0.08 (2.04)	0.625 (15.9)	10 (4.5)	4 (.03)
	7/32 (5)	0.625 (16)	1.05 (26.6)	1.125 (28.6)	0.160 (4.1)	0.143 (3.7)	0.875 (22.2)	0.08 (2.04)	0.625 (15.9)	10 (4.5)	4 (.03)
	1/4 (6)	0.625 (16)	1.05 (26.6)	1.125 (28.6)	0.160 (4.1)	0.143 (3.7)	0.875 (22.2)	0.08 (2.04)	0.625 (15.9)	10 (4.5)	4 (.03)
	5/16 (8)	0.750 (19)	1.32 (33.5)	1.5 (38.1)	0.200 (5.08)	0.200(5.08)	1.125 (28.6)	0.120 (3.05)	0.750 (19.1)	25 (11.3)	5 (.04)
	3/8 (10)	0.750 (19)	1.32 (33.5)	1.5 (38.1)	0.200 (5.08)	0.200(5.08)	1.125 (28.6)	0.120 (3.05)	0.750 (19.1)	25 (11.3)	5 (.04)
	7/16 (11)	1.00 (25.4)	2.078 (52.8)	1.750 (44.5)	0.250 (6.35)	0.220 (5.6)	1.406 (35.7)	0.255 (6.48)	1.000 (25.4)	75 (34)	9 (.06)
	1/2 (13)	1.00 (25.4)	2.078 (52.8)	1.750 (44.5)	0.250 (6.35)	0.220 (5.6)	1.406 (35.7)	0.255 (6.48)	1.000 (25.4)	75 (34)	9 (.06)

[1]metric available as required
[2]*other spring pre-loads available
Metric numbers are for reference only.

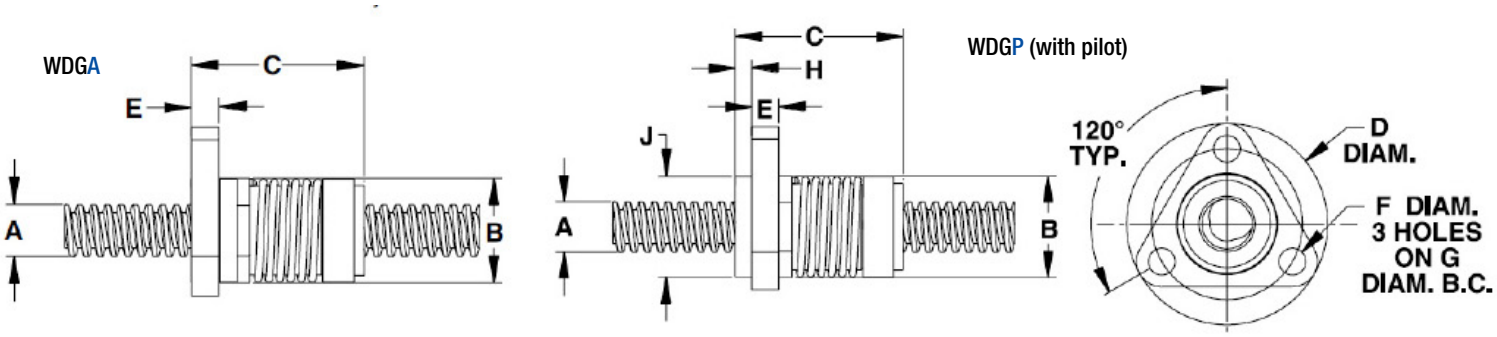

WDG Thread Mount

	Screw Diam. A inch (mm)	Nut Diam. B inch (mm)	Nut Length C inch (mm)	Thread M * inch (mm)	Thread Length N inch (mm)	Dynamic Load** lbs (Kg)	Drag Torque** oz-in (N-m)
WDGT Thread Mount	3/16 (4)	0.625 (16)	1.05 (26.6)	9/16 - 18	0.240 (6.1)	10 (4.5)	4 (.03)
	7/32 (5)	0.625 (16)	1.05 (26.6)	9/16 - 18	0.240 (6.1)	10 (4.5)	4 (.03)
	1/4 (6)	0.625 (16)	1.05 (26.6)	9/16 - 18	0.240 (6.1)	10 (4.5)	4 (.03)
	5/16 (8)	0.750 (19)	1.32 (33.5)	5/8 - 18	0.320 (8.1)	25 (11.3)	5 (.04)
	3/8 (10)	0.750 (19)	1.32 (33.5)	5/8 - 18	0.320 (8.1)	25 (11.3)	5 (.04)
	7/16 (11)	1.00 (25.4)	2.078 (52.8)	15/16 - 16	0.500 (12.7)	75 (34)	9 (.06)
	1/2 (13)	1.00 (25.4)	2.078 (52.8)	15/16 - 16	0.500 (12.7)	75 (34)	9 (.06)

[1]metric available as required
[2]*other spring pre-loads available
Metric numbers are for reference only.

Thread Mount

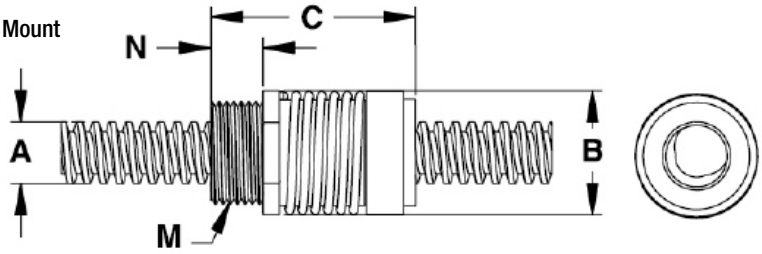

Dimensional Tolerances			
Inches		Metric (mm)	
.X	± .02	< L 4	± 0.1
.XX	± .010	4 < L ≤ 16	± 0.15
.XXX	± .005	16 < L ≤ 63	± 0.2
		63 < L ≤ 250	± 0.3

Lead Screw Compatibility: WDG Series

Diameter		Diameter Code	Lead		LEAD CODE	Left Hand Available	Outside Diameter (for reference)		Root Diameter (for reference)		Efficiency %*
inches	mm		inches	mm			inches	mm	inches	mm	
3/16	5	018	0.020	0.50	**0020**		0.188	4.78	0.163	4.14	30
			0.025	0.64	**0025**		0.188	4.78	0.150	3.81	39
			0.039	1.00	**0039**		0.188	4.78	0.144	3.66	47
			0.050	1.27	**0050**		0.188	4.78	0.124	3.15	58
			0.100	2.54	**0100**		0.188	4.78	0.136	3.45	69
			0.1875	4.76	**0188**		0.188	4.78	0.167	4.24	78
			0.200	5.08	**0200**		0.188	4.78	0.124	3.15	82
			0.375	9.53	**0375**		0.188	4.78	0.161	4.09	84
			0.400	10.16	**0400**		0.188	4.78	0.124	3.15	84
			0.427	10.85	**0427**		0.188	4.78	0.162	4.11	85
			0.500	12.70	**0500**	•	0.188	4.78	0.142	3.61	86
7/32	5.6	021	0.024	0.61	**0024**		0.218	5.54	0.181	4.60	31
			0.03125	0.79	**0031**		0.204	5.18	0.160	4.06	39
			0.048	1.22	**0048**		0.216	5.49	0.156	3.96	50
			0.050	1.27	**0050**		0.200	5.08	0.135	3.43	52
			0.0625	1.59	**0063**		0.218	5.54	0.142	3.61	60
			0.096	2.44	**0096**		0.218	5.54	0.156	3.96	66
			0.192	4.88	**0192**		0.218	5.54	0.156	3.96	78
			0.250	6.35	**0250**	•	0.204	5.18	0.140	3.56	81
			0.384	9.75	**0384**		0.218	5.54	0.159	4.04	86
1/4	6	025	0.024	0.61	**0024**		0.250	6.35	0.218	5.54	28
			0.025	0.64	**0025**		0.250	6.35	0.214	5.44	30
			0.03125	0.79	**0031**		0.250	6.35	0.208	5.28	34
			0.039	1.00	**0039**		0.250	6.35	0.190	4.83	40
			0.048	1.22	**0048**		0.250	6.35	0.190	4.83	45
			0.050	1.27	**0050**	•	0.250	6.35	0.191	4.85	46
			0.059	1.50	**0059**		0.250	6.35	0.172	4.37	52
			0.0625	1.59	**0063**		0.250	6.35	0.170	4.32	52
			0.079	2.00	**0079**		0.250	6.35	0.170	4.32	59
			0.096	2.44	**0096**		0.250	6.35	0.190	4.83	61
			0.100	2.54	**0100**		0.250	6.35	0.190	4.83	62
			0.118	3.00	**0118**		0.250	6.35	0.175	4.45	68
			0.125	3.18	**0125**		0.250	6.35	0.190	4.83	67
			0.197	5.00	**0197**		0.250	6.35	0.172	4.37	72
			0.200	5.08	**0200**		0.250	6.35	0.170	4.32	65
			0.250	6.35	**0250**	•	0.250	6.35	0.168	4.27	79
			0.3125	7.94	**0313**		0.250	6.35	0.184	4.67	81
			0.333	8.46	**0333**		0.250	6.35	0.170	4.32	82
			0.394	10.00	**0394**		0.250	6.35	0.170	4.32	78
			0.400	10.16	**0400**		0.250	6.35	0.170	4.32	84
			0.500	12.70	**0500**	•	0.250	6.35	0.169	4.29	85
			0.750	19.05	**0750**		0.250	6.35	0.170	4.32	86
			1.000	25.40	**1000**	•	0.250	6.35	0.170	4.32	84

Shaded areas have been translated from their designed inch or mm dimension to an equivalent mm or inch dimension.

* Listed efficiencies are theoretical values based on Kerkote® TFE coated lead screw
** Listed efficiencies for Micro screws are theoretical values based on non-coated lead screws
***Back-drive threshold is 50±10%

Lead Screw Compatibility: WDG Series

Diameter		Diameter Code	Lead		LEAD CODE	Left Hand Available	Outside Diameter (for reference)		Root Diameter (for reference)		Efficiency %*
inches	mm		inches	mm			inches	mm	inches	mm	
5/16	8	031	0.039	1.00	**0039**		0.315	8.00	0.261	6.63	34
			0.057	1.44	**0057**		0.315	8.00	0.243	6.17	43
			0.0741	1.88	**0074**		0.312	7.92	0.211	5.36	51
			0.111	2.82	**0111**		0.312	7.92	0.232	5.89	60
			0.167	4.24	**0167**		0.312	7.92	0.211	5.36	69
			0.250	6.35	**0250**		0.312	7.92	0.234	5.94	76
			0.500	12.70	**0500**		0.312	7.92	0.232	5.89	83
			0.800	20.32	**0800**		0.306	7.77	0.243	6.17	86
3/8	10	037	0.025	0.64	**0025**		0.375	9.53	0.337	8.56	21
			0.039	1.00	**0039**		0.394	10.01	0.350	8.89	28
			0.04167	1.06	**0042**		0.375	9.53	0.320	8.13	34
			0.050	1.27	**0050**	•	0.375	9.53	0.301	7.65	36
			0.055	1.40	**0055**		0.375	9.53	0.303	7.70	38
			0.059	1.50	**0059**	•	0.389	9.88	0.313	7.95	38
			0.0625	1.59	**0063**	•	0.388	9.86	0.295	7.49	41
			0.068	1.73	**0068**		0.388	9.86	0.295	7.49	42
			0.079	2.00	**0079**		0.375	9.53	0.264	6.71	47
			0.0833	2.12	**0083**		0.375	9.53	0.293	7.44	48
			0.100	2.54	**0100**	•	0.375	9.53	0.266	6.76	53
			0.125	3.18	**0125**	•	0.375	9.53	0.295	7.49	59
			0.157	4.00	**0157**		0.375	9.53	0.274	6.96	65
			0.1667	4.23	**0167**		0.371	9.42	0.261	6.63	61
			0.197	5.00	**0197**		0.375	9.53	0.266	6.76	69
			0.200	5.08	**0200**	•	0.375	9.53	0.266	6.76	69
			0.250	6.35	**0250**		0.375	9.53	0.268	6.81	70
			0.300	7.62	**0300**		0.375	9.53	0.255	6.48	76
			0.333	8.46	**0333**		0.375	9.53	0.245	6.22	78
			0.363	9.22	**0363**	•	0.375	9.53	0.260	6.60	79
			0.375	9.53	**0375**		0.375	9.53	0.265	6.73	79
			0.394	10.00	**0394**		0.375	9.53	0.260	6.60	79
			0.400	10.16	**0400**		0.375	9.53	0.293	7.44	79
			0.472	12.00	**0472**		0.388	9.86	0.287	7.29	82
			0.500	12.70	**0500**	•	0.388	9.86	0.265	6.73	81
			0.667	16.94	**0667**		0.375	9.53	0.273	6.93	83
			0.667	19.05	**0750**		0.388	9.86	0.273	6.93	84
			0.984	25.00	**0984**		0.375	9.53	0.262	6.65	84
			1.000	25.40	**1000**		0.383	9.73	0.254	6.45	84
			1.200	30.48	**1200**	•	0.383	9.73	0.254	6.45	84
			1.250	31.75	**1250**		0.375	9.53	0.278	7.06	84
			1.500	38.10	**1500**		0.375	9.53	0.264	6.71	83

Shaded areas have been translated from their designed inch or mm dimension to an equivalent mm or inch dimension.

* Listed efficiencies are theoretical values based on Kerkote® TFE coated lead screw
** Listed efficiencies for Micro screws are theoretical values based on non-coated lead screws
***Back-drive threshold is 50±10%

Lead Screw Compatibility: WDG Series

Diameter		Diameter Code	Lead		LEAD CODE	Left Hand Available	Outside Diameter (for reference)		Root Diameter (for reference)		Efficiency %*
inches	mm		inches	mm			inches	mm	inches	mm	
7/16	11	043	0.050	1.27	**0050**		0.437	11.10	0.362	9.19	30
			0.0625	1.59	**0063**	•	0.436	11.07	0.358	9.09	38
			0.079	2.00	**0079**		0.472	11.99	0.374	9.50	42
			0.111	2.82	**0111**		0.437	11.10	0.327	8.31	52
			0.118	3.00	**0118**		0.438	11.13	0.363	9.22	52
			0.125	3.18	**0125**		0.438	11.13	0.357	9.07	54
			0.197	5.00	**0197**		0.438	11.13	0.315	8.00	65
			0.236	6.00	**0236**		0.433	11.00	0.313	7.95	70
			0.250	6.35	**0250**		0.442	11.23	0.325	8.26	70
			0.307	7.80	**0307**		0.445	11.30	0.343	8.71	73
			0.325	8.26	**0325**		0.444	11.28	0.342	8.69	74
			0.394	10.00	**0394**		0.446	11.33	0.331	8.41	78
			0.472	12.00	**0472**		0.438	11.13	0.318	8.08	80
			0.500	12.70	**0500**		0.452	11.48	0.327	8.31	80
			0.615	15.62	**0615**		0.475	12.07	0.376	9.55	82
1/2	13	050	0.050	1.27	**0050**		0.495	12.57	0.433	11.00	29
			0.079	2.00	**0079**		0.473	12.01	0.355	9.02	41
			0.098	2.50	**0098**		0.500	12.70	0.383	9.73	46
			0.100	2.54	**0100**	•	0.490	12.45	0.364	9.25	46
			0.125	3.18	**0125**		0.500	12.70	0.374	9.50	51
			0.157	4.00	**0157**		0.500	12.70	0.384	9.75	58
			0.160	4.06	**0160**		0.500	12.70	0.388	9.86	67
			0.1667	4.23	**0167**		0.500	12.70	0.384	9.75	58
			0.197	5.00	**0197**		0.500	12.70	0.365	9.27	62
			0.200	5.08	**0200**	•	0.492	12.50	0.366	9.30	63
			0.250	6.35	**0250**		0.500	12.70	0.382	9.70	67
			0.333	8.46	**0333**	•	0.497	12.62	0.362	9.19	73
			0.394	10.00	**0394**		0.497	12.62	0.362	9.19	76
			0.400	10.16	**0400**		0.497	12.62	0.364	9.25	76
			0.500	12.70	**0500**		0.488	12.40	0.352	8.94	79
			0.630	16.00	**0630**		0.500	12.70	0.374	9.50	80
			0.750	19.05	**0750**		0.525	13.34	0.399	10.13	83
			0.800	20.32	**0800**		0.500	12.70	0.370	9.40	83
			0.984	25.00	**0984**		0.500	12.70	0.369	9.37	84
			1.000	25.40	**1000**	•	0.490	12.45	0.372	9.45	84
			1.500	38.10	**1500**		0.490	12.45	0.374	9.50	85
			2.000	50.80	**2000**		0.488	12.40	0.378	9.60	87

Shaded areas have been translated from their designed inch or mm dimension to an equivalent mm or inch dimension.

* Listed efficiencies are theoretical values based on Kerkote® TFE coated lead screw
** Listed efficiencies for Micro screws are theoretical values based on non-coated lead screws
***Back-drive threshold is 50±10%

ZBA Nut Series

Developed specifically for those applications that require very smooth and consistent motion, the patented ZBA Series offers a cost effective anti-backlash assembly for applications requiring precise positional accuracy and repeatability. The ZBA has been developed specifically for those applications that require very smooth and consistent motion such as printing, scanning, and coordinate measurement systems. An added benefit of the ZBA design is the ability to manually adjust the drag torque setting to match the specific requirements of the application. This drag torque can also be set at the factory to meet individual customer specifications. The inherent damping qualities of the ZBA design make it ideally suited for applications requiring noise or vibration control. The standard ZBA unit utilizes a self-lubricating polyacetal nut radially preloaded on a 303 stainless steel screw. End machining to customer specifications and Kerkote® TFE screw coating are optional.

ZBA Series Nut Assembly

Highlights

- Adjustable Drag Torque
- Cost Effective
- Smooth and Consistent Motion

Grease Compatibility

Coatings	Compatible
Kerkote TFE Coating	YES
Black Ice TFE Coating	YES
Grease	YES

Dimensional Tolerances

Inches		Metric (mm)	
.X	± .02	< L 4	± 0.1
.XX	± .010	4 < L ≤ 16	± 0.15
.XXX	± .005	16 < L ≤ 63	± 0.2
		63 < L ≤ 250	± 0.3

Anti-Backlash Life

Without Kerkote® TFE Coating inch / (cm)	With Kerkote® TFE Coating inch / (cm)
5 to 10 million (12 to 25 million)	15 to 40 million (38 to 100 million)

Anti-backlash life is defined as the nut's ability to compensate for wear while maintaining its zero backlash properties. Above life data is based on 25% of the dynamic load rating. Life will vary with loading, operating environment, and duty cycle. The longer screw leads generally provide longer life.

Technical Data

Material	Polyacetal, Lubricant Additive
Tensile Strength	9,700 psi
Coefficient of Expansion	6.0 x 10 –5 in/in/°F
Coefficent of Friction Polyacetal Nut to Screw	Static = .08 .08 ** Dynamic = .15 .09 **
Standard Operating Temperature Range	32 - 200° F* (0 - 93° C)*

* Very high or low temperatures may cause significant changes in the nut fit or drag torque. Please call the HKP Engineering Team at 603 213 6290 for optional temperature range materials.
** with Kerkote® TFE Coating.

Identifying the ZBA Micro Series Nut Part Number Codes when Ordering

ZBA	A	K	R	—	062	—	0100	—	XXXX
Prefix	**Nut Mounting Style**	**Lubrication**	**Thread Direction**		**Diameter Code**		**Nominal Thread Lead Code**		**Unique Identifier**
ZBA	**A** = Flanged (Triangular) **T** = Threaded Micro Series **X** =Custom	**S** = Uncoated **K** = Kerkote® TFE Coating **G** = Grease **N** = Nut only **B** = Black Ice® TFE Coating	**R** = Right hand **L** = Left hand (Refer to lead screw charts for availability		**025** = .250 in (6 mm) **031** = .313 in (8 mm) **037** = .375 in (10 mm) **043** = .438 in (11 mm) **050** = .500 in (13 mm) **062** = .625 in (16 mm) **075** = .750 in (19 mm) **087** = .875 in (22 mm) **093** = .938 in (24 mm)		(Refer to LEAD CODE Specifications charts, pages 3 to 6)		Proprietary suffix assigned to a specific customer application. The identifier can apply to either a standard or custom part.

NOTE: Dashes must be included in Part Number (–) as shown above. For assistance call our Engineering Team at 603 213 6290.

Dimensional Drawings

ZBA Flange Mount

	Screw Diam. A inch (mm)	Nut Diam. B inch (mm)	Nut Length C inch (mm)	Flange Diam. D inch (mm)	Flange Thickness E inch (mm)	Mounting Hole Diam. F inch (mm)	Bolt Circle Diam. G inch (mm)	Dynamic Load lbs (Kg)	Drag Torque oz-in (N-m)
ZBAA Flange Mount	1/4 (6)	.50 (12.7)	1.0 (26)	1.0 (25.4)	.18 (4.6)	.140 (3.6)	.750 (19.1)	5 (2.3)	.25 - 3 (.002 - .021)
	5/16 (8)	.70 (17.8)	1.9 (48)	1.5 (38.1)	.18 (4.6)	.200 (5.08)	1.125 (28.6)	10 (5)	1 - 5 (.007 - .03)
	3/8 (10)	.70 (17.8)	1.9 (48)	1.5 (38.1)	.18 (4.6)	.200 (5.08)	1.125 (28.6)	10 (5)	1 - 5 (.007 - .03)
	7/16 (11)	.80 (20.3)	1.9 (48)	1.5 (38.1)	.18 (4.6)	.200 (5.08)	1.125 (28.6)	15 (7)	2 - 6 (.014 - .04)
	1/2 (13)	.89 (22.6)	2.0 (51)	1.62 (41.2)	.26 (6.6)	.200 (5.08)	1.125 (28.6)	25 (11)	3 - 7 (.02 - .05)
	5/8 (16)	1.06 (26.9)	2.0 (51)	1.75 (44.5)	.26 (6.6)	.200 (5.08)	1.375 (34.9)	35 (16)	4 - 8 (.028 - .055)
	3/4 (19)	1.70 (43.2)	2.88 (73.2)	2.63 (66.8)	0.38 (9.6)	0.218 (5.5)	2.25 (57.2)	55 (25)	5-9 (.03-.064)
	7/8 (22)	1.70 (43.2)	2.88 (73.2)	2.63 (66.8)	0.38 (9.6)	0.218 (5.5)	2.25 (57.2)	55 (25)	5-9 (.03-.064)
	15/16 (24)	1.70 (43.2)	2.88 (73.2)	2.63 (66.8)	0.38 (9.6)	0.218 (5.5)	2.25 (57.2)	55 (25)	5-9 (.03-.064)

[1]metric available as required
[2]*other spring pre-loads available
Metric numbers are for reference only.

Flange Mount

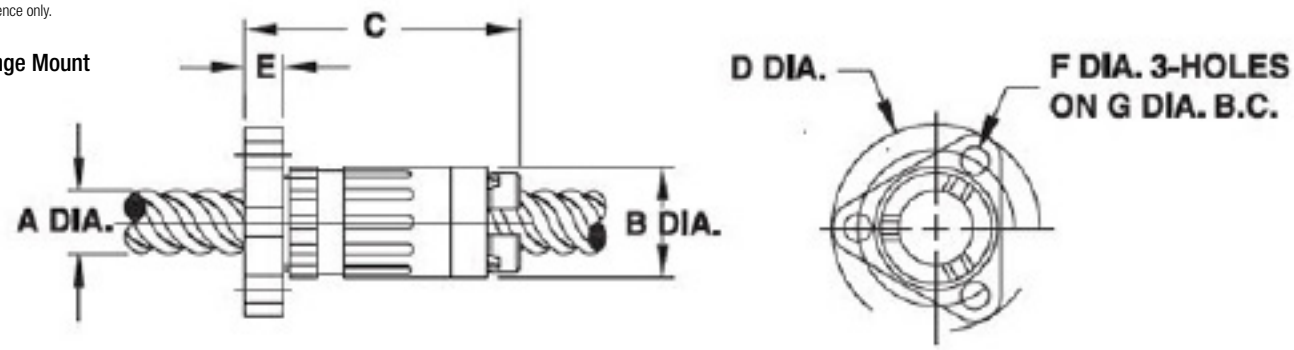

ZBX Thread Mount

	Screw Diam. A inch (mm)	Nut Diam. B inch (mm)	Nut Length C inch (mm)	Flange Diam. D inch (mm)	Flange Thickness E inch (mm)	Thread M * inch (mm)	Thread Length N inch (mm)	Dynamic Load** lbs (Kg)	Drag Torque** oz-in (N-m)
ZBXT Thread Mount	1/4 (6)	.50 (12.7)	1.3 (33)	.80 (20.3)	.22 (5.6)	5/8 - 18	.16 (4.1)	5 (2.3)	.25 - 3 (.002 - .021)
	5/16 (8)	.70 (17.8)	2.2 (56)	1.00 (25.4)	.17 (4.3)	5/8 - 18	.38 (9.7)	10 (5)	1 - 5 (.007 - .03)
	3/8 (10)	.70 (17.8)	2.2 (56)	1.00 (25.4)	.17 (4.3)	5/8 - 18	.38 (9.7)	10 (5)	1 - 5 (.007 - .03)
	7/16 (11)	.80 (20.3)	2.3 (59)	1.00 (25.4)	.12 (3.1)	15/16 - 16	.38 (9.7)	15 (7)	2 - 6 (.014 - .04)
	1/2 (13)	.89 (22.6)	2.3 (59)	1.02 (25.9)	.12 (3.1)	15/16 - 16	.38 (9.7)	25 (11)	3 - 7 (.02 - .05)
	5/8 (16)	1.06 (26.9)	2.4 (61)	1.06 (26.9)	.15 (3.8)	15/16 - 16	.50 (12.7)	35 (16)	4 - 8 (.028 - .055)

[1]metric available as required
[2]*other spring pre-loads available
Metric numbers are for reference only.

Thread Mount

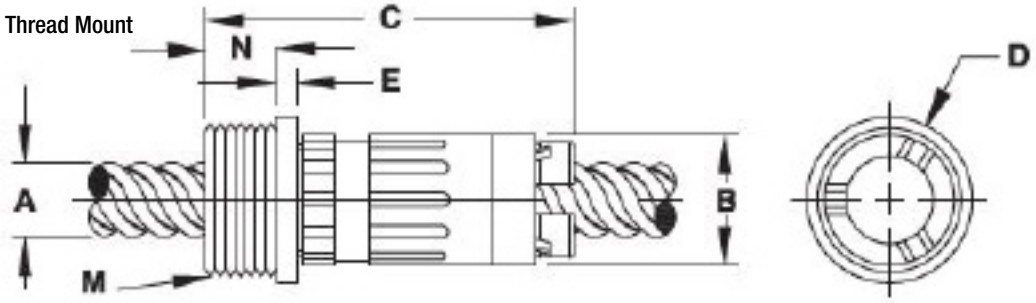

Lead Screw Compatibility: ZBA Series

Diameter		Diameter Code	Lead		LEAD CODE	Left Hand Available	Outside Diameter (for reference)		Root Diameter (for reference)		Efficiency %*
inches	mm		inches	mm			inches	mm	inches	mm	
1/4	6	025	0.024	0.61	**0024**		0.250	6.35	0.218	5.54	28
			0.025	0.64	**0025**		0.250	6.35	0.214	5.44	30
			0.03125	0.79	**0031**		0.250	6.35	0.208	5.28	34
			0.039	1.00	**0039**		0.250	6.35	0.190	4.83	40
			0.048	1.22	**0048**		0.250	6.35	0.190	4.83	45
			0.050	1.27	**0050**	•	0.250	6.35	0.191	4.85	46
			0.059	1.50	**0059**		0.250	6.35	0.172	4.37	52
			0.0625	1.59	**0063**		0.250	6.35	0.170	4.32	52
			0.079	2.00	**0079**		0.250	6.35	0.170	4.32	59
			0.096	2.44	**0096**		0.250	6.35	0.190	4.83	61
			0.100	2.54	**0100**		0.250	6.35	0.190	4.83	62
			0.118	3.00	**0118**		0.250	6.35	0.175	4.45	68
			0.125	3.18	**0125**		0.250	6.35	0.190	4.83	67
			0.197	5.00	**0197**		0.250	6.35	0.172	4.37	72
			0.200	5.08	**0200**		0.250	6.35	0.170	4.32	65
			0.250	6.35	**0250**	•	0.250	6.35	0.168	4.27	79
			0.3125	7.94	**0313**		0.250	6.35	0.184	4.67	81
			0.333	8.46	**0333**		0.250	6.35	0.170	4.32	82
			0.394	10.00	**0394**		0.250	6.35	0.170	4.32	78
			0.400	10.16	**0400**		0.250	6.35	0.170	4.32	84
			0.500	12.70	**0500**	•	0.250	6.35	0.169	4.29	85
			0.750	19.05	**0750**		0.250	6.35	0.170	4.32	86
			1.000	25.40	**1000**	•	0.250	6.35	0.170	4.32	84
5/16	8	031	0.039	1.00	**0039**		0.315	8.00	0.261	6.63	34
			0.057	1.44	**0057**		0.315	8.00	0.243	6.17	43
			0.0741	1.88	**0074**		0.312	7.92	0.211	5.36	51
			0.111	2.82	**0111**		0.312	7.92	0.232	5.89	60
			0.167	4.24	**0167**		0.312	7.92	0.211	5.36	69
			0.250	6.35	**0250**		0.312	7.92	0.234	5.94	76
			0.500	12.70	**0500**		0.312	7.92	0.232	5.89	83
			0.800	20.32	**0800**		0.306	7.77	0.243	6.17	86

Shaded areas have been translated from their designed inch or mm dimension to an equivalent mm or inch dimension.

* Listed efficiencies are theoretical values based on Kerkote® TFE coated lead screw
** Listed efficiencies for Micro screws are theoretical values based on non-coated lead screws
***Back-drive threshold is 50±10%

Lead Screw Compatibility: ZBA Series

Diameter		Diameter Code	Lead		LEAD CODE	Left Hand Available	Outside Diameter (for reference)		Root Diameter (for reference)		Efficiency %*
inches	mm		inches	mm			inches	mm	inches	mm	
3/8	10	037	0.025	0.64	**0025**		0.375	9.53	0.337	8.56	21
			0.039	1.00	**0039**		0.394	10.01	0.350	8.89	28
			0.04167	1.06	**0042**		0.375	9.53	0.320	8.13	34
			0.050	1.27	**0050**	•	0.375	9.53	0.301	7.65	36
			0.055	1.40	**0055**		0.375	9.53	0.303	7.70	38
			0.059	1.50	**0059**	•	0.389	9.88	0.313	7.95	38
			0.0625	1.59	**0063**	•	0.388	9.86	0.295	7.49	41
			0.068	1.73	**0068**		0.388	9.86	0.295	7.49	42
			0.079	2.00	**0079**		0.375	9.53	0.264	6.71	47
			0.0833	2.12	**0083**		0.375	9.53	0.293	7.44	48
			0.100	2.54	**0100**	•	0.375	9.53	0.266	6.76	53
			0.125	3.18	**0125**	•	0.375	9.53	0.295	7.49	59
			0.157	4.00	**0157**		0.375	9.53	0.274	6.96	65
			0.1667	4.23	**0167**		0.371	9.42	0.261	6.63	61
			0.197	5.00	**0197**		0.375	9.53	0.266	6.76	69
			0.200	5.08	**0200**	•	0.375	9.53	0.266	6.76	69
			0.250	6.35	**0250**		0.375	9.53	0.268	6.81	70
			0.300	7.62	**0300**		0.375	9.53	0.255	6.48	76
			0.333	8.46	**0333**		0.375	9.53	0.245	6.22	78
			0.363	9.22	**0363**	•	0.375	9.53	0.260	6.60	79
			0.375	9.53	**0375**		0.375	9.53	0.265	6.73	79
			0.394	10.00	**0394**		0.375	9.53	0.260	6.60	79
			0.400	10.16	**0400**		0.375	9.53	0.293	7.44	79
			0.472	12.00	**0472**		0.388	9.86	0.287	7.29	82
			0.500	12.70	**0500**	•	0.388	9.86	0.265	6.73	81
			0.667	16.94	**0667**		0.375	9.53	0.273	6.93	83
			0.667	19.05	**0750**		0.388	9.86	0.273	6.93	84
			0.984	25.00	**0984**		0.375	9.53	0.262	6.65	84
			1.000	25.40	**1000**		0.383	9.73	0.254	6.45	84
			1.200	30.48	**1200**	•	0.383	9.73	0.254	6.45	84
			1.250	31.75	**1250**		0.375	9.53	0.278	7.06	84
			1.500	38.10	**1500**		0.375	9.53	0.264	6.71	83
7/16	11	043	0.050	1.27	**0050**		0.437	11.10	0.362	9.19	30
			0.0625	1.59	**0063**	•	0.436	11.07	0.358	9.09	38
			0.079	2.00	**0079**		0.472	11.99	0.374	9.50	42
			0.111	2.82	**0111**		0.437	11.10	0.327	8.31	52
			0.118	3.00	**0118**		0.438	11.13	0.363	9.22	52
			0.125	3.18	**0125**		0.438	11.13	0.357	9.07	54
			0.197	5.00	**0197**		0.438	11.13	0.315	8.00	65
			0.236	6.00	**0236**		0.433	11.00	0.313	7.95	70
			0.250	6.35	**0250**		0.442	11.23	0.325	8.26	70
			0.307	7.80	**0307**		0.445	11.30	0.343	8.71	73
			0.325	8.26	**0325**		0.444	11.28	0.342	8.69	74
			0.394	10.00	**0394**		0.446	11.33	0.331	8.41	78
			0.472	12.00	**0472**		0.438	11.13	0.318	8.08	80
			0.500	12.70	**0500**		0.452	11.48	0.327	8.31	80
			0.615	15.62	**0615**		0.475	12.07	0.376	9.55	82

Lead Screw Compatibility: ZBA Series

Diameter		Diameter Code	Lead		LEAD CODE	Left Hand Available	Outside Diameter (for reference)		Root Diameter (for reference)		Efficiency %*
inches	mm		inches	mm			inches	mm	inches	mm	
1/2	13	050	0.050	1.27	**0050**		0.495	12.57	0.433	11.00	29
			0.079	2.00	**0079**		0.473	12.01	0.355	9.02	41
			0.098	2.50	**0098**		0.500	12.70	0.383	9.73	46
			0.100	2.54	**0100**	•	0.490	12.45	0.364	9.25	46
			0.125	3.18	**0125**		0.500	12.70	0.374	9.50	51
			0.157	4.00	**0157**		0.500	12.70	0.384	9.75	58
			0.160	4.06	**0160**		0.500	12.70	0.388	9.86	67
			0.1667	4.23	**0167**		0.500	12.70	0.384	9.75	58
			0.197	5.00	**0197**		0.500	12.70	0.365	9.27	62
			0.200	5.08	**0200**	•	0.492	12.50	0.366	9.30	63
			0.250	6.35	**0250**		0.500	12.70	0.382	9.70	67
			0.333	8.46	**0333**	•	0.497	12.62	0.362	9.19	73
			0.394	10.00	**0394**		0.497	12.62	0.362	9.19	76
			0.400	10.16	**0400**		0.497	12.62	0.364	9.25	76
			0.500	12.70	**0500**		0.488	12.40	0.352	8.94	79
			0.630	16.00	**0630**		0.500	12.70	0.374	9.50	80
			0.750	19.05	**0750**		0.525	13.34	0.399	10.13	83
			0.800	20.32	**0800**		0.500	12.70	0.370	9.40	83
			0.984	25.00	**0984**		0.500	12.70	0.369	9.37	84
			1.000	25.40	**1000**	•	0.490	12.45	0.372	9.45	84
			1.500	38.10	**1500**		0.490	12.45	0.374	9.50	85
			2.000	50.80	**2000**		0.488	12.40	0.378	9.60	87
5/8	16	062	0.100	2.54	**0100**		0.615	15.62	0.498	12.65	40
			0.125	3.18	**0125**	•	0.625	15.88	0.470	11.94	45
			0.200	5.08	**0200**		0.625	15.88	0.495	12.57	53
			0.250	6.35	**0250**		0.625	15.88	0.469	11.91	63
			0.315	8.00	**0315**		0.627	15.93	0.493	12.52	68
			0.410	10.41	**0410**	•	0.625	15.88	0.481	12.22	72
			0.500	12.70	**0500**	•	0.625	15.88	0.478	12.14	76
			0.630	16.00	**0630**		0.625	15.88	0.491	12.47	78
			1.000	25.40	**1000**		0.625	15.88	0.481	12.22	83
			1.500	38.10	**1500**		0.625	15.88	0.499	12.67	85
			1.575	40.00	**1575**	•	0.625	15.88	0.499	12.67	86
			2.000	50.80	**2000**	•	0.625	15.88	0.499	12.67	86

Shaded areas have been translated from their designed inch or mm dimension to an equivalent mm or inch dimension.

* Listed efficiencies are theoretical values based on Kerkote® TFE coated lead screw
** Listed efficiencies for Micro screws are theoretical values based on non-coated lead screws
***Back-drive threshold is 50±10%

Lead Screw Compatibility: ZBA Series

Diameter		Diameter Code	Lead		LEAD CODE	Left Hand Available	Outside Diameter (for reference)		Root Diameter (for reference)		Efficiency %*
inches	mm		inches	mm			inches	mm	inches	mm	
3/4	19	075	0.0625	1.59	**0063**		0.750	19.05	0.671	17.04	25
			0.098	2.50	**0098**		0.742	18.85	0.626	15.90	35
			0.100	2.54	**0100**	•	0.746	18.95	0.624	15.85	35
			0.1667	4.23	**0167**		0.727	18.47	0.645	16.38	47
			0.197	5.00	**0197**		0.745	18.92	0.624	15.85	51
			0.200	5.08	**0200**		0.741	18.82	0.632	16.05	52
			0.250	6.35	**0250**		0.731	18.57	0.639	16.23	57
			0.276	7.00	**0276**		0.750	19.05	0.624	15.85	59
			0.333	8.46	**0333**		0.750	19.05	0.624	15.85	64
			0.394	10.00	**0394**		0.745	18.92	0.619	15.72	67
			0.500	12.70	**0500**		0.744	18.90	0.624	15.85	73
			0.551	14.00	**0551**		0.750	19.05	0.624	15.85	73
			0.591	15.00	**0591**		0.749	19.02	0.623	15.82	74
			0.709	18.00	**0709**		0.780	19.81	0.650	16.51	77
			0.748	19.00	**0748**		0.672	17.07	0.547	13.89	80
			0.787	20.00	**0787**		0.780	19.81	0.648	16.46	78
			0.800	20.32	**0800**		0.750	19.05	0.618	15.70	79
			0.945	24.00	**0945**		0.734	18.64	0.633	16.08	80
			1.000	25.40	**1000**	•	0.743	18.87	0.619	15.72	81
			1.500	38.10	**1500**	•	0.712	18.08	0.590	14.99	84
			1.969	50.00	**1969**		0.751	19.08	0.620	15.75	84
			2.000	50.80	**2000**	•	0.742	18.85	0.611	15.52	84
			2.400	60.96	**2400**	•	0.750	19.05	0.620	15.75	84
			3.622	92.00	**3622**	•	0.750	19.05	0.634	16.10	87
7/8	22	087	0.200	5.08	**0200**	•	0.870	22.10	0.742	18.85	48
			0.236	6.00	**0236**		0.848	21.54	0.773	19.63	52
			0.250	6.35	**0250**		0.875	22.23	0.749	19.02	53
			0.394	10.00	**0394**		0.875	22.23	0.741	18.82	65
			0.500	12.70	**0500**		0.862	21.89	0.744	18.90	69
			0.630	16.00	**0630**		0.875	22.23	0.741	18.82	73
			0.667	16.94	**0667**		0.871	22.12	0.745	18.92	74
			0.787	20.00	**0787**		0.875	22.23	0.741	18.82	78
			0.945	24.00	**0945**		0.875	22.23	0.741	18.82	79
			1.000	25.40	**1000**		0.871	22.12	0.742	18.85	80
15/16	24	093	0.050	1.27	**0050**	LH Only	0.938	23.83	0.874	22.20	17
			2.000	50.80	**2000**		0.927	23.55	0.815	20.70	85
			3.000	76.20	**3000**	•	0.939	23.85	0.803	20.40	86

Shaded areas have been translated from their designed inch or mm dimension to an equivalent mm or inch dimension.

* Listed efficiencies are theoretical values based on Kerkote® TFE coated lead screw
** Listed efficiencies for Micro screws are theoretical values based on non-coated lead screws
***Back-drive threshold is 50±10%

ZBX Nut Series

An economical anti-backlash nut assembly that provides precise positional accuracy and repeatability. The patented ZBX Series anti-backlash assembly offers an effective linear actuator for design operations requiring precise positional accuracy and repeatability, with minimum cost. The standard ZBX unit utilizes a patented self-lubricating polyacetal nut radially preloaded on a 303 stainless steel screw. The ZBX assembly, through its unique transfer of loads, offers exceptional torque consistency and repeatability when traversing in either direction. The inherent damping qualities of the ZBX design make it ideally suited for vertical applications requiring noise or vibration control. End machining to customer specifications and Kerkote® TFE screw coating are optional, as are designs for special operating configurations or environments.

ZBM Micro Nut Series

Made from self-lubricating acetal and Kerkite® High Performance Composite Polymers. This remarkable product line is an enabling technology, opening up a whole new range of designs. Developed in response to growing demands in many markets, Haydon Kerk Motion Solutions has offered micro screws on a custom basis for more than 10 years. Now, available as a standard product, customers can get quicker, cost effective deliveries. The Micro Series ZBM anti-backlash and Micro Series lead screws are available as standalone components or integrated into the high performance Haydon linear actuators. The Micro Series allows the miniaturization of products, reduced power consumption, and weight reduction without sacrificing performance or reliability.

Highlights

- Economical anti-backlash nut assembly
- Light Loads
- Ultra-Smooth Motion
- Precise positional accuracy and repeatability

ZBX Series Nut Assembly

ZBM Micro Series Nut Assembly

ZBX Technical Data

Material	Polyacetal with Lubricant Additive
Tensile Strength	9,700 psi
Coefficient of Expansion	6.0 x 10 –5 in/in/°F
Coefficent of Friction Polyacetal Nut to Screw	Static = .08 .08 ** Dynamic = .15 .09 **
Standard Operating Temperature Range	32 - 200° F* (0 - 93° C)*

* Very high or low temperatures may cause significant changes in the nut fit or drag torque. Please call the HKP Engineering Team at 603 213 6290 for optional temperature range materials.
** with Kerkote® TFE Coating.

ZBX Grease Compatibility

Coatings	Compatible
Kerkote® TFE Coating	YES
Black Ice® TFE Coating	YES
Grease	YES

ZBX Anti-Backlash Life

Without Kerkote® TFE Coating inch / (cm)	With Kerkote® TFE Coating inch / (cm)
40 to 60 million (100 to 150 million)	150 to 200 million (380 to 500 million)

Anti-backlash life is defined as the nut's ability to compensate for wear while maintaining its zero backlash properties. Above life data is based on 25% of the dynamic load rating. Life will vary with loading, operating environment, and duty cycle. The longer screw leads generally provide longer life.

Identifying the ZBX and ZBM Micro Series Nut Part Number Codes when Ordering

ZBX	T	S	R	—	025	—	0050	—	XXXX
Prefix	**Nut Mounting Style**	**Lubrication**	**Thread Direction**		**Diameter Code**		**Nominal Thread Lead Code**		**Unique Identifier**
ZBX **ZBM** = Micro Series	**A** = Flanged (Triangular) **T** = Threaded Micro Series **R** =Rectangular **X** =Custom	**S** = Uncoated **K** = Kerkote® TFE Coating **G** = Grease **N** = Nut only **B** = Black Ice® TFE Coating	**R** = Right hand **L** = Left hand (Refer to lead screw charts for availability		**008*** =.078 in (2 mm) **025** = .250 in (6 mm) **031** = .313 in (8 mm) **037** = .375 in (10 mm) **043** = .438 in (11 mm) **050** = .500 in (13 mm) **062** = .625 in (16 mm) ***Micro Series only**		(Refer to LEAD CODE Specifications charts, pages 4 to 6)		Proprietary suffix assigned to a specific customer application. The identifier can apply to either a standard or custom part.

NOTE: Dashes must be included in Part Number (–) as shown above. For assistance call our Engineering Team at 603 213 6290.

Dimensional Drawings

ZBX Flange Mount

	Screw Diam. A inch (mm)	Nut Diam. B inch (mm)	Nut Length C inch (mm)	Flange Diam. D inch (mm)	Flange Thickness E inch (mm)	Mounting Hole Diam. F inch (mm)	Bolt Circle Diam. G inch (mm)	Dynamic Load** lbs (Kg)	Drag Torque** oz-in (N-m)
ZBXA Flange Mount	1/4 (6)	.50 (12.7)	1.0 (26)	1.0 (25.4)	.18 (4.6)	.140 (3.6)	.750 (19.1)	5 (2.3)	.25 - 3 (.002 - .021)
	5/16 (8)	.70 (17.8)	1.9 (48)	1.5 (38.1)	.18 (4.6)	.200 (5.08)	1.125 (28.6)	10 (5)	1 - 5 (.007 - .03)
	3/8 (10)	.70 (17.8)	1.9 (48)	1.5 (38.1)	.18 (4.6)	.200 (5.08)	1.125 (28.6)	10 (5)	1 - 5 (.007 - .03)
	7/16 (11)	.80 (20.3)	1.9 (48)	1.5 (38.1)	.18 (4.6)	.200 (5.08)	1.125 (28.6)	15 (7)	2 - 6 (.014 - .04)
	1/2 (13)	.89 (22.6)	2.0 (51)	1.62 (41.2)	.26 (6.6)	.200 (5.08)	1.125 (28.6)	25 (11)	3 - 7 (.02 - .05)
	5/8 (16)	1.06 (26.9)	2.0 (51)	1.75 (44.5)	.26 (6.6)	.200 (5.08)	1.375 (34.9)	35 (16)	4 - 8 (.028 - .055)

[1]metric available as required
[2]*other spring pre-loads available
Metric numbers are for reference only.

Flange Mount

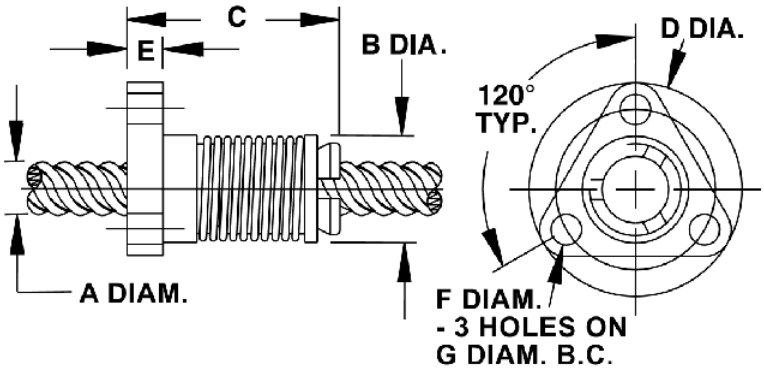

ZBX Thread Mount

	Screw Diam. A inch (mm)	Nut Diam. B inch (mm)	Nut Length C inch (mm)	Flange Diam. D inch (mm)	Flange Thickness E inch (mm)	Thread M * inch (mm)	Thread Length N inch (mm)	Dynamic Load** lbs (Kg)	Drag Torque** oz-in (N-m)
ZBXT Thread Mount	1/4 (6)	.50 (12.7)	1.3 (33)	.80 (20.3)	.22 (5.6)	5/8 - 18	.16 (4.1)	5 (2.3)	.25 - 3 (.002 - .021)
	5/16 (8)	.70 (17.8)	2.2 (56)	1.00 (25.4)	.17 (4.3)	5/8 - 18	.38 (9.7)	10 (5)	1 - 5 (.007 - .03)
	3/8 (10)	.70 (17.8)	2.2 (56)	1.00 (25.4)	.17 (4.3)	5/8 - 18	.38 (9.7)	10 (5)	1 - 5 (.007 - .03)
	7/16 (11)	.80 (20.3)	2.3 (59)	1.00 (25.4)	.12 (3.1)	15/16 - 16	.38 (9.7)	15 (7)	2 - 6 (.014 - .04)
	1/2 (13)	.89 (22.6)	2.3 (59)	1.02 (25.9)	.12 (3.1)	15/16 - 16	.38 (9.7)	25 (11)	3 - 7 (.02 - .05)
	5/8 (16)	1.06 (26.9)	2.4 (61)	1.06 (26.9)	.15 (3.8)	15/16 - 16	.50 (12.7)	35 (16)	4 - 8 (.028 - .055)

[1]metric available as required
[2]*other spring pre-loads available
Metric numbers are for reference only.

Thread Mount

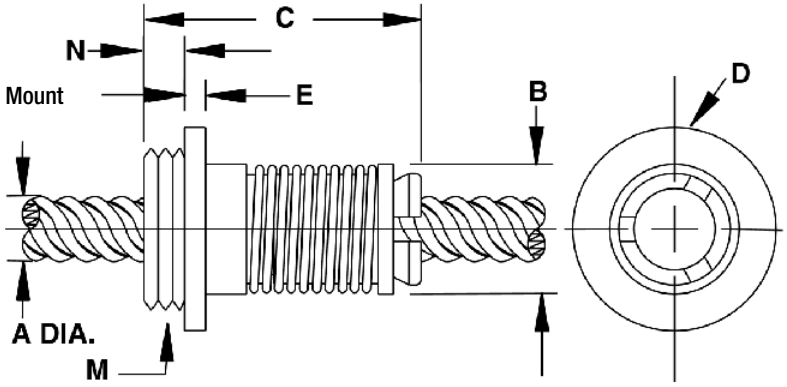

ZBX Dimensional Tolerances			
Inches		Metric (mm)	
.X	± .02	< L 4	± 0.1
.XX	± .010	4 < L ≤ 16	± 0.15
.XXX	± .005	16 < L ≤ 63	± 0.2
		63 < L ≤ 250	± 0.3

ZBM Micro Series Rectangular Anti-Backlash Nut Style for Micro Lead screws

ZBMR	ZBMW Nut Style	Screw Diam. A inch (mm)	Nut Diam. B inch (mm)	Nut Length C inch (mm)	Flange Diam. D1 inch (mm)	Flange Diam. D inch (mm)	Flange Thickness E inch (mm)	Thread M * inch (mm)	Thread Length N inch (mm)	Dynamic Load** lbs (Kg)	Drag Torque** oz-in (N-m)
	Rectangular Flange	5/64 (2)	0.22 (5.5)	0.32 (8)	0.22 (5.5)	0.47 (11.9)	0.08 (2.0)	0.07 (1.8)	0.35 (9.0)	1 (.45)	0.5 (.0035) Max.

[1]metric available as required
[2]*other spring pre-loads available
Metric numbers are for reference only.

Micro Lead Screw Size List	Diameter (inches)	Diameter (mm)	Diam. Code	Lead (inches)	Lead (mm)	LEAD CODE	Outside Diameter (for Reference) (inches)	Outside Diameter (for Reference) (mm)	Root Diameter (for Reference) (inches)	Root Diameter (for Reference) (mm)	Effi-ciency %**
	5/64	2	008	0.020	0.50	**0020**	0.077	1.96	0.057	1.45	36**
				0.039	1.00	**0039**	0.079	2.01	0.059	1.50	52**
				0.079	2.00	**0079**	0.077	1.96	0.057	1.45	66**

Shaded areas have been translated from their designed inch or mm dimension to an equivalent mm or inch dimension.

** Listed efficiencies for Micro screws are theoretical values based on non-coated lead screws

Rectangular

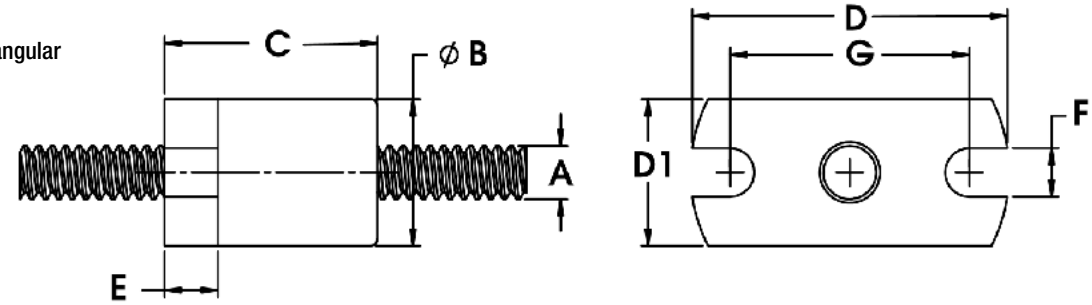

Lead Screw Compatibility: ZBX Series

Diameter		Diameter Code	Lead		LEAD CODE	Left Hand Available	Outside Diameter (for reference)		Root Diameter (for reference)		Efficiency %*
inches	mm		inches	mm			inches	mm	inches	mm	
5/64	2	008	0.020	0.50	**0020**		0.077	1.96	0.057	1.45	36**
			0.039	1.00	**0039**		0.079	2.01	0.059	1.50	52**
			0.079	2.00	**0079**		0.077	1.96	0.057	1.45	66**
1/4	6	025	0.024	0.61	**0024**		0.250	6.35	0.218	5.54	28
			0.025	0.64	**0025**		0.250	6.35	0.214	5.44	30
			0.03125	0.79	**0031**		0.250	6.35	0.208	5.28	34
			0.039	1.00	**0039**		0.250	6.35	0.190	4.83	40
			0.048	1.22	**0048**		0.250	6.35	0.190	4.83	45
			0.050	1.27	**0050**	•	0.250	6.35	0.191	4.85	46
			0.059	1.50	**0059**		0.250	6.35	0.172	4.37	52
			0.0625	1.59	**0063**		0.250	6.35	0.170	4.32	52
			0.079	2.00	**0079**		0.250	6.35	0.170	4.32	59
			0.096	2.44	**0096**		0.250	6.35	0.190	4.83	61
			0.100	2.54	**0100**		0.250	6.35	0.190	4.83	62
			0.118	3.00	**0118**		0.250	6.35	0.175	4.45	68
			0.125	3.18	**0125**		0.250	6.35	0.190	4.83	67
			0.197	5.00	**0197**		0.250	6.35	0.172	4.37	72
			0.200	5.08	**0200**		0.250	6.35	0.170	4.32	65
			0.250	6.35	**0250**	•	0.250	6.35	0.168	4.27	79
			0.3125	7.94	**0313**		0.250	6.35	0.184	4.67	81
			0.333	8.46	**0333**		0.250	6.35	0.170	4.32	82
			0.394	10.00	**0394**		0.250	6.35	0.170	4.32	78
			0.400	10.16	**0400**		0.250	6.35	0.170	4.32	84
			0.500	12.70	**0500**	•	0.250	6.35	0.169	4.29	85
			0.750	19.05	**0750**		0.250	6.35	0.170	4.32	86
			1.000	25.40	**1000**	•	0.250	6.35	0.170	4.32	84
5/16	8	031	0.039	1.00	**0039**		0.315	8.00	0.261	6.63	34
			0.057	1.44	**0057**		0.315	8.00	0.243	6.17	43
			0.0741	1.88	**0074**		0.312	7.92	0.211	5.36	51
			0.111	2.82	**0111**		0.312	7.92	0.232	5.89	60
			0.167	4.24	**0167**		0.312	7.92	0.211	5.36	69
			0.250	6.35	**0250**		0.312	7.92	0.234	5.94	76
			0.500	12.70	**0500**		0.312	7.92	0.232	5.89	83
			0.80	20.32	**0800**		0.306	7.77	0.243	6.17	86

Shaded areas have been translated from their designed inch or mm dimension to an equivalent mm or inch dimension.

* Listed efficiencies are theoretical values based on Kerkote® TFE coated lead screw
** Listed efficiencies for Micro screws are theoretical values based on non-coated lead screws
***Back-drive threshold is 50±10%

Lead Screw Compatibility: ZBX Series

Diameter		Diameter Code	Lead		LEAD CODE	Left Hand Available	Outside Diameter (for reference)		Root Diameter (for reference)		Efficiency %*
inches	mm		inches	mm			inches	mm	inches	mm	
3/8	10	037	0.025	0.64	**0025**		0.375	9.53	0.337	8.56	21
			0.039	1.00	**0039**		0.394	10.01	0.350	8.89	28
			0.04167	1.06	**0042**		0.375	9.53	0.320	8.13	34
			0.050	1.27	**0050**	•	0.375	9.53	0.301	7.65	36
			0.055	1.40	**0055**		0.375	9.53	0.303	7.70	38
			0.059	1.50	**0059**	•	0.389	9.88	0.313	7.95	38
			0.0625	1.59	**0063**	•	0.388	9.86	0.295	7.49	41
			0.068	1.73	**0068**		0.388	9.86	0.295	7.49	42
			0.079	2.00	**0079**		0.375	9.53	0.264	6.71	47
			0.0833	2.12	**0083**		0.375	9.53	0.293	7.44	48
			0.100	2.54	**0100**	•	0.375	9.53	0.266	6.76	53
			0.125	3.18	**0125**	•	0.375	9.53	0.295	7.49	59
			0.157	4.00	**0157**		0.375	9.53	0.274	6.96	65
			0.1667	4.23	**0167**		0.371	9.42	0.261	6.63	61
			0.197	5.00	**0197**		0.375	9.53	0.266	6.76	69
			0.200	5.08	**0200**	•	0.375	9.53	0.266	6.76	69
			0.250	6.35	**0250**		0.375	9.53	0.268	6.81	70
			0.300	7.62	**0300**		0.375	9.53	0.255	6.48	76
			0.333	8.46	**0333**		0.375	9.53	0.245	6.22	78
			0.363	9.22	**0363**	•	0.375	9.53	0.260	6.60	79
			0.375	9.53	**0375**		0.375	9.53	0.265	6.73	79
			0.394	10.00	**0394**		0.375	9.53	0.260	6.60	79
			0.400	10.16	**0400**		0.375	9.53	0.293	7.44	79
			0.472	12.00	**0472**		0.388	9.86	0.287	7.29	82
			0.500	12.70	**0500**	•	0.388	9.86	0.265	6.73	81
			0.667	16.94	**0667**		0.375	9.53	0.273	6.93	83
			0.667	19.05	**0750**		0.388	9.86	0.273	6.93	84
			0.984	25.00	**0984**		0.375	9.53	0.262	6.65	84
			1.000	25.40	**1000**		0.383	9.73	0.254	6.45	84
			1.200	30.48	**1200**	•	0.383	9.73	0.254	6.45	84
			1.250	31.75	**1250**		0.375	9.53	0.278	7.06	84
			1.500	38.10	**1500**		0.375	9.53	0.264	6.71	83
7/16	11	043	0.050	1.27	**0050**		0.437	11.10	0.362	9.19	30
			0.0625	1.59	**0063**	•	0.436	11.07	0.358	9.09	38
			0.079	2.00	**0079**		0.472	11.99	0.374	9.50	42
			0.111	2.82	**0111**		0.437	11.10	0.327	8.31	52
			0.118	3.00	**0118**		0.438	11.13	0.363	9.22	52
			0.125	3.18	**0125**		0.438	11.13	0.357	9.07	54
			0.197	5.00	**0197**		0.438	11.13	0.315	8.00	65
			0.236	6.00	**0236**		0.433	11.00	0.313	7.95	70
			0.250	6.35	**0250**		0.442	11.23	0.325	8.26	70
			0.307	7.80	**0307**		0.445	11.30	0.343	8.71	73
			0.325	8.26	**0325**		0.444	11.28	0.342	8.69	74
			0.394	10.00	**0394**		0.446	11.33	0.331	8.41	78
			0.472	12.00	**0472**		0.438	11.13	0.318	8.08	80
			0.500	12.70	**0500**		0.452	11.48	0.327	8.31	80
			0.615	15.62	**0615**		0.475	12.07	0.376	9.55	82

Contact Details

Shaded areas have been translated from their designed inch or mm dimension to an equivalent mm or inch dimension.

* Listed efficiencies are theoretical values based on Kerkote® TFE coated lead screw
** Listed efficiencies for Micro screws are theoretical values based on non-coated lead screws
***Back-drive threshold is 50±10%

Lead Screw Compatibility: ZBX Series

Diameter		Diameter Code	Lead		LEAD CODE	Left Hand Available	Outside Diameter (for reference)		Root Diameter (for reference)		Efficiency %*
inches	mm		inches	mm			inches	mm	inches	mm	
1/2	13	050	0.050	1.27	**0050**		0.495	12.57	0.433	11.00	29
			0.079	2.00	**0079**		0.473	12.01	0.355	9.02	41
			0.098	2.50	**0098**		0.500	12.70	0.383	9.73	46
			0.100	2.54	**0100**	•	0.490	12.45	0.364	9.25	46
			0.125	3.18	**0125**		0.500	12.70	0.374	9.50	51
			0.157	4.00	**0157**		0.500	12.70	0.384	9.75	58
			0.160	4.06	**0160**		0.500	12.70	0.388	9.86	67
			0.1667	4.23	**0167**		0.500	12.70	0.384	9.75	58
			0.197	5.00	**0197**		0.500	12.70	0.365	9.27	62
			0.200	5.08	**0200**	•	0.492	12.50	0.366	9.30	63
			0.250	6.35	**0250**		0.500	12.70	0.382	9.70	67
			0.333	8.46	**0333**	•	0.497	12.62	0.362	9.19	73
			0.394	10.00	**0394**		0.497	12.62	0.362	9.19	76
			0.400	10.16	**0400**		0.497	12.62	0.364	9.25	76
			0.500	12.70	**0500**		0.488	12.40	0.352	8.94	79
			0.630	16.00	**0630**		0.500	12.70	0.374	9.50	80
			0.750	19.05	**0750**		0.525	13.34	0.399	10.13	83
			0.800	20.32	**0800**		0.500	12.70	0.370	9.40	83
			0.984	25.00	**0984**		0.500	12.70	0.369	9.37	84
			1.000	25.40	**1000**	•	0.490	12.45	0.372	9.45	84
			1.500	38.10	**1500**		0.490	12.45	0.374	9.50	85
			2.000	50.80	**2000**		0.488	12.40	0.378	9.60	87
5/8	16	062	0.100	2.54	**0100**		0.615	15.62	0.498	12.65	40
			0.125	3.18	**0125**	•	0.625	15.88	0.470	11.94	45
			0.200	5.08	**0200**		0.625	15.88	0.495	12.57	53
			0.250	6.35	**0250**		0.625	15.88	0.469	11.91	63
			0.315	8.00	**0315**		0.627	15.93	0.493	12.52	68
			0.410	10.41	**0410**	•	0.625	15.88	0.481	12.22	72
			0.500	12.70	**0500**	•	0.625	15.88	0.478	12.14	76
			0.630	16.00	**0630**		0.625	15.88	0.491	12.47	78
			1.000	25.40	**1000**		0.625	15.88	0.481	12.22	83
			1.500	38.10	**1500**		0.625	15.88	0.499	12.67	85
			1.575	40.00	**1575**	•	0.625	15.88	0.499	12.67	86
			2.000	50.80	**2000**	•	0.625	15.88	0.499	12.67	86

Shaded areas have been translated from their designed inch or mm dimension to an equivalent mm or inch dimension.

* Listed efficiencies are theoretical values based on Kerkote® TFE coated lead screw
** Listed efficiencies for Micro screws are theoretical values based on non-coated lead screws
***Back-drive threshold is 50±10%

Free Wheeling and Specialty Nuts

Haydon Kerk offers conventional style free-wheeling nuts – without anti-backlash features – in our standard self-lubricating polyacetal material, as well as a wide range of proprietary engineered thermoplastics to suit a wealth of applications. Catalog configurations provide several mounting options for quick and affordable implementation, and our extensive inhouse molding capabilities allow for highly custom and tightly integrated conformations for our OEM customers.

3DP Nut Series

Advanced technology for custom motion control prototype development. The 3DP nut offering is designed for rapid prototyping with additive manufacturing. One of the challenges with the current material offerings in 3D printing is the lack of low wear, low friction materials. For prototyping a lead screw driven assembly, it's critical to simulate the correct tribological performance of the lead nut solution to understand how the axis of motion will perform. By integrating basic anti-rotation, and axial locking features with our high efficiency thread form the 3DP nut allows for simple integration of a premium performance thread system into a 3D printed prototype. This gives engineers and developers a leg up on the competition by being able to quickly test several configurations while leveraging additive manufacturing and top performing lead nut materials. The result is shortened design cycle and rapid product launch to market allowing you to capture more market share with your latest and greatest solution.

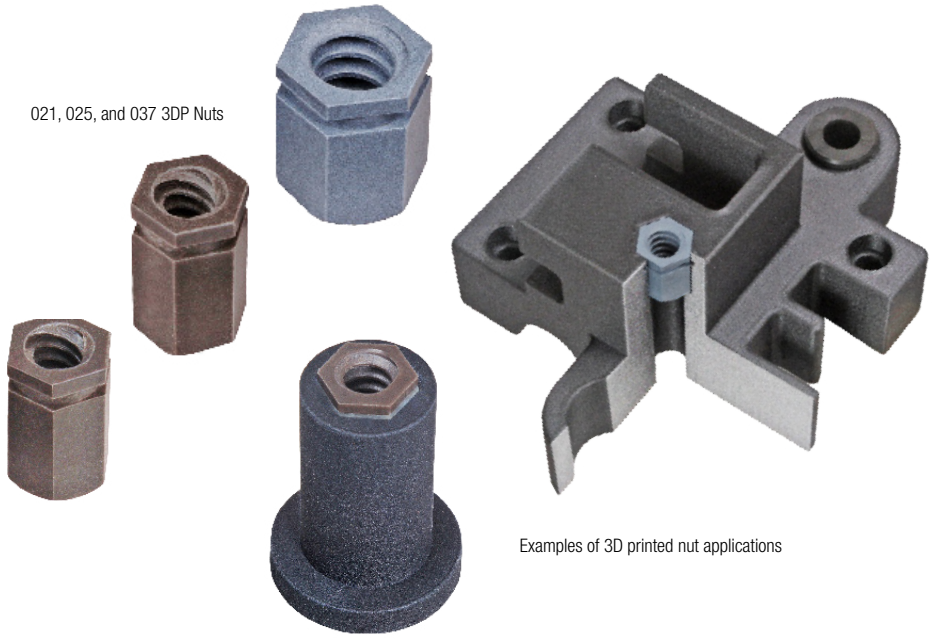

021, 025, and 037 3DP Nuts

Examples of 3D printed nut applications

Grease Compatibility

Coatings	Compatible
Kerkote® TFE Coating	YES
Black Ice® TFE Coating	YES
Grease	YES

Technical Data

Material	**Polyacetal** with Lubricant Additive	**Kerkite® KN30** High Performance Engineered Polymer
Tensile Strength	9,700 psi	25,000 psi
Coefficient of Expansion	6.0 x 10 –5 in/in/°F	1.1 x 10 –5 in/in/°F
Coefficent of Friction Polyacetal Nut to Screw	Static = .08 .08 ** Dynamic = .15 .09 **	
Standard Operating Temperature Range	32 - 200° F* (0 - 93° C)*	

* Very high or low temperatures may cause significant changes in the nut fit or drag torque. Please call the HKP Engineering Team at 603 213 6290 for optional temperature range materials.
** with Kerkote® TFE Coating.

Identifying the 3DP Series Nut Part Number Codes when Ordering

3DP	H	K	R	—	012	—	0012	—	BZ00
Prefix	**Nut Mounting Style**	**Lubrication**	**Thread Direction**		**Diameter Code**		**Nominal Thread Lead Code**		**Unique Identifier**
3DP	**H** = Hex	**S =** Uncoated **K =** Kerkote® TFE Coating **G =** Grease **N =** Nut only **B =** Black Ice® TFE Coating	**R =** Right hand **L =** Left hand (Refer to lead screw charts for availability		**012 =** .125 in (3.2 mm) **013 =** .133 in (3.3 mm) **014 =** .141 in (3.6 mm) **016 =** .156 in (4 mm) **018 =** .188 in (5 mm) **021 =** .219 in (5.6 mm) **025 =** .250 in (6 mm) **037 =** .375 in (10 mm)		(Refer to LEAD CODE Specifications charts, pages 3 to 4)		**BZ00 =** Acetal base with lubrication matrix **KZ00 =** Kerkite® KN30 high performance polymer **BYXX =** Standard acetal base hex nut and cut to length lead screw (XX = length in inches) **KYXX =** Kerkite® KN30 base hex nut and cut to length lead screw (XX = length in inches)

NOTE: Dashes must be included in Part Number (–) as shown above. For assistance call our Engineering Team at 603 213 6290.

■ **Dimensional Drawings** inch [mm]

3DP Hex Nut: 012 to 021 Series

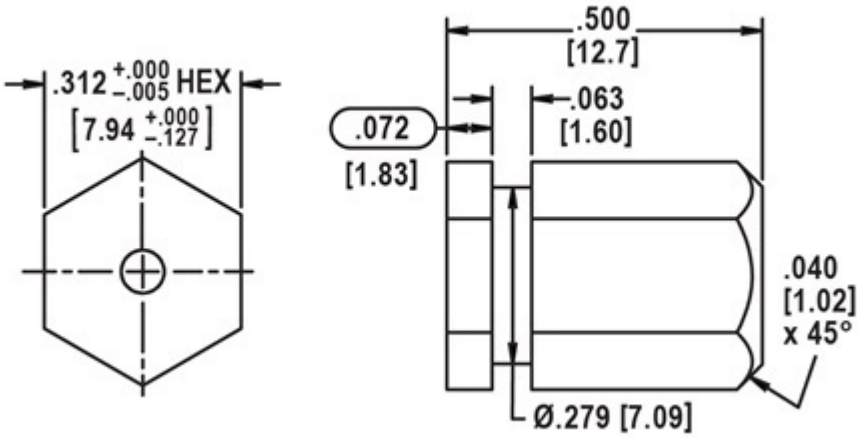

3DP Hex Nut: 025 Series

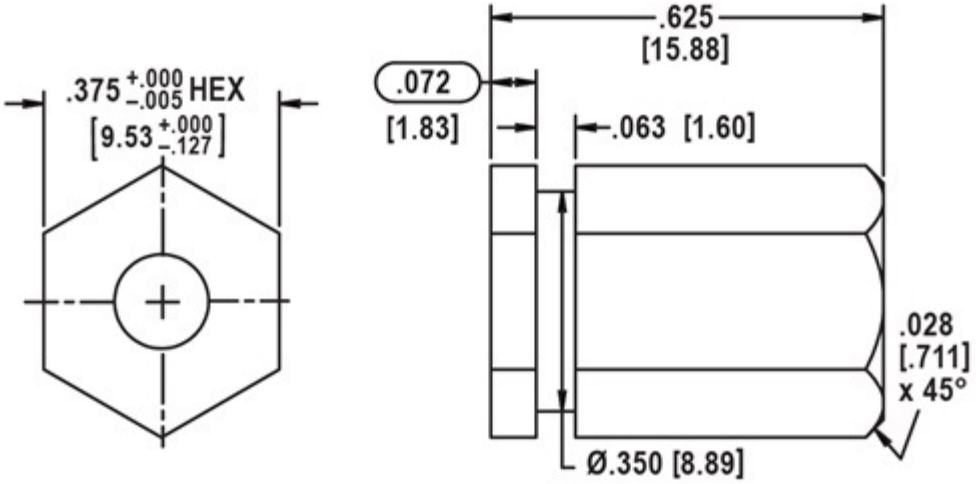

3DP Hex Nut: 037 Series

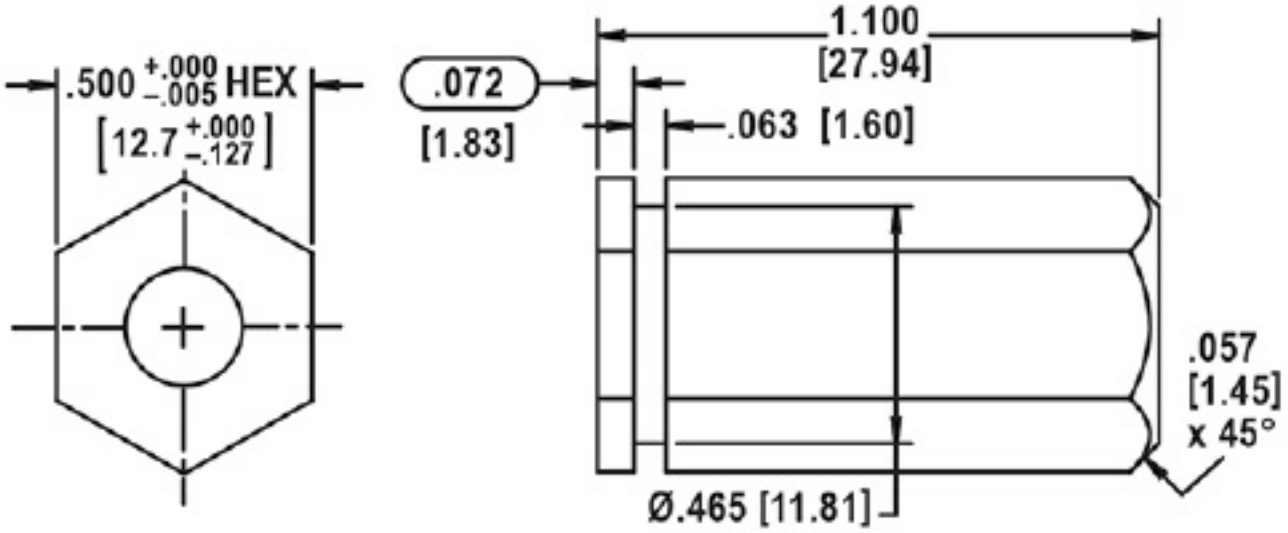

Lead Screw Compatibility: 3DP Series

Diameter		Diameter Code	Lead		LEAD CODE	Left Hand Available	Outside Diameter (for reference)		Root Diameter (for reference)		Efficiency %*
inches	mm		inches	mm			inches	mm	inches	mm	
1/8	3.2	012	0.024	0.61	**0024**		0.129	3.28	0.093	2.36	44
			0.039	1.00	**0039**		0.129	3.28	0.094	2.39	57
			0.048	1.22	**0048**		0.129	3.28	0.093	2.36	61
			0.075	1.91	**0075**		0.129	3.28	0.093	2.36	70
			0.096	2.44	**0096**	•	0.129	3.28	0.093	2.36	75
			0.125	3.18	**0125**	LH Only	0.125	3.18	0.078	1.98	80
.132	3.3	013	0.020	0.50	**0020**		0.132	3.35	0.104	2.64	42
			0.039	1.00	**0039**		0.132	3.35	0.080	2.03	61
			0.079	2.00	**0079**		0.132	3.35	0.080	2.03	75
			0.157	4.00	**0157**		0.132	3.35	0.080	2.03	84
			0.315	8.00	**0315**		0.132	3.35	0.080	2.03	87
9/64	3.6	014	0.012	0.30	**0012**		0.140	3.56	0.123	3.12	26
			0.024	0.61	**0024**		0.140	3.56	0.105	2.67	43
			0.048	1.22	**0048**		0.140	3.56	0.081	2.06	62
			0.096	2.44	**0096**		0.140	3.56	0.081	2.06	75
			0.394	10.00	**0394**		0.140	3.56	0.102	2.59	86
5/32	4	016	0.033	0.84	**0033**	•	0.156	3.96	0.116	2.95	45
			0.050	1.27	**0050**	LH Only	0.156	3.96	0.096	2.44	59
			0.094	2.39	**0094**		0.164	4.17	0.128	3.25	67
			0.125	3.18	**0125**		0.168	4.27	0.130	3.30	74
			0.250	6.35	**0250**		0.156	3.96	0.130	3.30	83
			0.375	9.53	**0375**		0.156	3.96	0.130	3.30	85
			0.500	12.70	**0500**		0.156	3.96	0.130	3.30	86
3/16	5	018	0.020	0.50	**0020**		0.188	4.78	0.163	4.14	30
			0.025	0.64	**0025**		0.188	4.78	0.150	3.81	39
			0.039	1.00	**0039**		0.188	4.78	0.144	3.66	47
			0.050	1.27	**0050**		0.188	4.78	0.124	3.15	58
			0.100	2.54	**0100**		0.188	4.78	0.136	3.45	69
			0.1875	4.76	**0188**		0.188	4.78	0.167	4.24	78
			0.200	5.08	**0200**		0.188	4.78	0.124	3.15	82
			0.375	9.53	**0375**		0.188	4.78	0.161	4.09	84
			0.400	10.16	**0400**		0.188	4.78	0.124	3.15	84
			0.427	10.85	**0427**		0.188	4.78	0.162	4.11	85
			0.500	12.70	**0500**	•	0.188	4.78	0.142	3.61	86
7/32	5.6	021	0.024	0.61	**0024**		0.218	5.54	0.181	4.60	31
			0.03125	0.79	**0031**		0.204	5.18	0.160	4.06	39
			0.048	1.22	**0048**		0.216	5.49	0.156	3.96	50
			0.050	1.27	**0050**		0.200	5.08	0.135	3.43	52
			0.0625	1.59	**0063**		0.218	5.54	0.142	3.61	60
			0.096	2.44	**0096**		0.218	5.54	0.156	3.96	66
			0.192	4.88	**0192**		0.218	5.54	0.156	3.96	78
			0.250	6.35	**0250**	•	0.204	5.18	0.140	3.56	81
			0.384	9.75	**0384**		0.218	5.54	0.159	4.04	86

Shaded areas have been translated from their designed inch or mm dimension to an equivalent mm or inch dimension.

* Listed efficiencies are theoretical values based on Kerkote® TFE coated lead screw
** Listed efficiencies for Micro screws are theoretical values based on non-coated lead screws
***Back-drive threshold is 50±10%

Lead Screw Compatibility: 3DP Series

Diameter		Diameter Code	Lead		LEAD CODE	Left Hand Available	Outside Diameter (for reference)		Root Diameter (for reference)		Efficiency %*
inches	mm		inches	mm			inches	mm	inches	mm	
1/4	6	025	0.024	0.61	**0024**		0.250	6.35	0.218	5.54	28
			0.025	0.64	**0025**		0.250	6.35	0.214	5.44	30
			0.03125	0.79	**0031**		0.250	6.35	0.208	5.28	34
			0.039	1.00	**0039**		0.250	6.35	0.190	4.83	40
			0.048	1.22	**0048**		0.250	6.35	0.190	4.83	45
			0.050	1.27	**0050**	•	0.250	6.35	0.191	4.85	46
			0.059	1.50	**0059**		0.250	6.35	0.172	4.37	52
			0.0625	1.59	**0063**		0.250	6.35	0.170	4.32	52
			0.079	2.00	**0079**		0.250	6.35	0.170	4.32	59
			0.096	2.44	**0096**		0.250	6.35	0.190	4.83	61
			0.100	2.54	**0100**		0.250	6.35	0.190	4.83	62
			0.118	3.00	**0118**		0.250	6.35	0.175	4.45	68
			0.125	3.18	**0125**		0.250	6.35	0.190	4.83	67
			0.197	5.00	**0197**		0.250	6.35	0.172	4.37	72
			0.200	5.08	**0200**		0.250	6.35	0.170	4.32	65
			0.250	6.35	**0250**	•	0.250	6.35	0.168	4.27	79
			0.3125	7.94	**0313**		0.250	6.35	0.184	4.67	81
			0.333	8.46	**0333**		0.250	6.35	0.170	4.32	82
			0.394	10.00	**0394**		0.250	6.35	0.170	4.32	78
			0.400	10.16	**0400**		0.250	6.35	0.170	4.32	84
			0.500	12.70	**0500**	•	0.250	6.35	0.169	4.29	85
			0.750	19.05	**0750**		0.250	6.35	0.170	4.32	86
			1.000	25.40	**1000**	•	0.250	6.35	0.170	4.32	84
3/8	10	037	0.025	0.64	**0025**		0.375	9.53	0.337	8.56	21
			0.039	1.00	**0039**		0.394	10.01	0.350	8.89	28
			0.04167	1.06	**0042**		0.375	9.53	0.320	8.13	34
			0.050	1.27	**0050**	•	0.375	9.53	0.301	7.65	36
			0.055	1.40	**0055**		0.375	9.53	0.303	7.70	38
			0.059	1.50	**0059**	•	0.389	9.88	0.313	7.95	38
			0.0625	1.59	**0063**	•	0.388	9.86	0.295	7.49	41
			0.068	1.73	**0068**		0.388	9.86	0.295	7.49	42
			0.079	2.00	**0079**		0.375	9.53	0.264	6.71	47
			0.0833	2.12	**0083**		0.375	9.53	0.293	7.44	48
			0.100	2.54	**0100**	•	0.375	9.53	0.266	6.76	53
			0.125	3.18	**0125**	•	0.375	9.53	0.295	7.49	59
			0.157	4.00	**0157**		0.375	9.53	0.274	6.96	65
			0.1667	4.23	**0167**		0.371	9.42	0.261	6.63	61
			0.197	5.00	**0197**		0.375	9.53	0.266	6.76	69
			0.200	5.08	**0200**	•	0.375	9.53	0.266	6.76	69
			0.250	6.35	**0250**		0.375	9.53	0.268	6.81	70
			0.300	7.62	**0300**		0.375	9.53	0.255	6.48	76
			0.333	8.46	**0333**		0.375	9.53	0.245	6.22	78
			0.363	9.22	**0363**	•	0.375	9.53	0.260	6.60	79
			0.375	9.53	**0375**		0.375	9.53	0.265	6.73	79
			0.394	10.00	**0394**		0.375	9.53	0.260	6.60	79
			0.400	10.16	**0400**		0.375	9.53	0.293	7.44	79
			0.472	12.00	**0472**		0.388	9.86	0.287	7.29	82
			0.500	12.70	**0500**	•	0.388	9.86	0.265	6.73	81
			0.667	16.94	**0667**		0.375	9.53	0.273	6.93	83
			0.667	19.05	**0750**		0.388	9.86	0.273	6.93	84
			0.984	25.00	**0984**		0.375	9.53	0.262	6.65	84
			1.000	25.40	**1000**		0.383	9.73	0.254	6.45	84
			1.200	30.48	**1200**	•	0.383	9.73	0.254	6.45	84
			1.250	31.75	**1250**		0.375	9.53	0.278	7.06	84
			1.500	38.10	**1500**		0.375	9.53	0.264	6.71	83

Shaded areas have been translated from their designed inch or mm dimension to an equivalent mm or inch dimension.

* Listed efficiencies are theoretical values based on Kerkote® TFE coated lead screw
** Listed efficiencies for Micro screws are theoretical values based on non-coated lead screws
***Back-drive threshold is 50±10%

BFW Nut Series

Conventional style, without “anti-backlash” function. The BFW Series general purpose “free-wheeling” nut is for applications not requiring anti-backlash and wear compensation. It provides effective power transmission at minimum cost, and features long life, self-lubricating polyacetal nuts.

The secure mounting and convenience of a circular flange is standard on the BFW nuts with triangular flange and thread mounting as an option. Many custom configurations are available.

Screws are 303 stainless steel with extended life, custom Kerkote® TFE coating optional. Assemblies can be supplied cut-to-length or with ends machined to customer requirementsand Kerkote® TFE screw coating are optional.

BFW Series Nut Assemblies

BFW Micro Series Nut Assemblies

BFW Micro Nut Series

The BFW Micro Series enables a whole new range of micro-sized designs. It allows the miniaturization without sacrificing performance or reliability.

Backlash

N/A, Typical Backlash
.003 to .010 (.076 to .25)

Grease Compatibility

Coatings	Compatible
Kerkote® TFE Coating	YES
Black Ice® TFE Coating	YES
Grease	NO

Technical Data

Material	Polyacetal, Lubricant Additive
Tensile Strength	9,700 psi
Coefficient of Expansion	6.0 x 10 –5 in/in/°F
Coefficent of Friction Polyacetal Nut to Screw	Static = .08 .08 ** Dynamic = .15 .09 **
Standard Operating Temperature Range	32 - 200° F* (0 - 93° C)*

* Very high or low temperatures may cause significant changes in the nut fit or drag torque. Please call the HKP Engineering Team at 603 213 6290 for optional temperature range materials.
** with Kerkote® TFE Coating.

Identifying the BFW Series Nut Part Number Codes when Ordering

BFW	A	K	R	—	018	—	0020	—	XXXX
Prefix	**Nut Mounting Style**	**Lubrication**	**Thread Direction**		**Diameter Code**		**Nominal Thread Lead Code**		**Unique Identifier**
BFW	**A** = Flanged (Triangular) **F** = Flanged (Round) **T** = Threaded **X** = Custom For Mini and Micro Series Only: **B** = Barrel m µ **R** = Rectangular m µ **m BFW Mini Series** **µ BFW Micro Series**	**S =** Uncoated **K =** Kerkote® TFE Coating **G =** Grease **N =** Nut only **B =** Black Ice® TFE Coating	**R =** Right hand **L =** Left hand (Not Available for Micro Series) (Refer to lead screw charts for availability		**008 µ** = .078 in (2 mm) **012m** = .125 in (3.2 mm) **013m** = .133 in (3.3 mm) **014m** = .141 in (3.6 mm) **016m** = .156 in (4 mm) **018m** = .188 in (5 mm) **021m** = .219 in (5.6 mm) **025** = .250 in (6 mm) **031** = .313 in (8 mm) **037** = .375 in (10 mm) **043** = .438 in (11 mm) **050** = .500 in (13 mm) **062** = .625 in (16 mm) **075** = .750 in (19 mm) **087** = .875 in (22 mm) **093** = .938 in (24 mm) **m BFW Mini Series** **µ BFW Micro Series**		(Refer to LEAD CODE Specifications charts, pages 5 to 9)		Proprietary suffix assigned to a specific customer application. The identifier can apply to either a standard or custom part.

NOTE: Dashes must be included in Part Number (–) as shown above. For assistance call our Engineering Team at 603 213 6290.

Dimensional Drawings

BFW Round Flange Mount

	Screw Diam. A inch (mm)	Nut Diam. B inch (mm)	Nut Length C inch (mm)	Flange Diam. D inch (mm)	Flange Thickness E inch (mm)	Mounting Hole Diam. F inch (mm)	Bolt Circle Diam. G inch (mm)	Dynamic Load lbs (Kg)
BFWF Flange Mount	1/4 (6)	.50 (12.7)	1.0 (25.4)	100 (25.4)	.19 (4.8)	.140 (3.56)	.750 (19.05)	50 (20)
	5/16 (8)	.63 (15.9)	1.0 (25.4)	1.13 (28.7)	.19 (4.8)	.140 (3.56)	.875 (22.23)	75 (35)
	3/8 (10)	.63 (15.9)	1.0 (25.4)	1.13 (28.7)	.19 (4.8)	.140 (3.56)	.875 (22.23)	75 (35)
	7/16 (11)	.75 (19.1)	1.5 (38)	1.50 38.1)	.19 (4.8)	.203 (5.16)	1.125 (28.58)	90 (40)
	1/2 (13)	.75 (19.1)	1.5 (38)	1.50 38.1)	.19 (4.8)	.203 (5.16)	1.125 (28.58)	150 (68)
	5/8 (16)	.88 (22.2)	1.5 (38)	1.50 38.1)	.19 (4.8)	.203 (5.16)	1.188 (30.18)	225 (100)
	3/4 (19)	1.12 (28.4)	2.0 (51)	1.75 (44.4)	.25 (6.4)	.203 (5.16)	1.438 (36.53)	350 (160)
	7/8 (22)	1.50 (38.1)	2.0 (51)	2.25 (57.1)	.25 (6.4)	.203 (5.16)	1.875 (47.63)	500 (227)
	15/16 (24)	1.50 (38.1)	2.0 (51)	2.25 (57.1)	.25 (6.4)	.203 (5.16)	1.875 (47.63)	500 (227)

Metric numbers are for reference only.

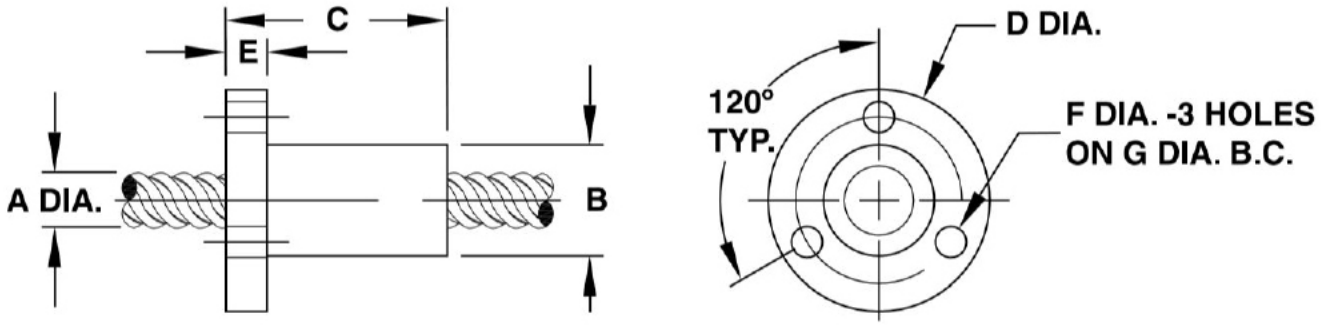

BFW Triangular Flange Mount

	Screw Diam. A inch (mm)	Nut Diam. B inch (mm)	Nut Length C inch (mm)	Flange Diam. D inch (mm)	Flange Thickness E inch (mm)	Mounting Hole Diam. F inch (mm)	Bolt Circle Diam. G inch (mm)	Dynamic Load** lbs (Kg)
BFWA Triangular Flange Mount	1/4 (6)	.50 (12.7)	1.0 (25.4)	1.00 (25.4)	.17 (4.3)	.143 (3.63)	.750 (19.05)	50 (20)
	5/16 (8)	.50 (12.7)	1.9 (48.3)	1.50 (38.1)	.17 (4.3)	.197 (5.00)	1.125 (28.58)	75 (35)
	3/8 (10)	.66 (16.6)	1.9 (48.3)	1.50 (38.1)	.17 (4.3)	.197 (5.00)	1.125 (28.58)	75 (35)
	7/16 (11)	.75 (19.1)	1.9 (48.3)	1.50 (38.1)	.17 (4.3)	.197 (5.00)	1.125 (28.58)	90 (40)
	1/2 (13)	.75 (19.1)	1.9 (48.3)	1.50 (38.1)	.17 (4.3)	.197 (5.00)	1.125 (28.58)	150 (68)

Metric numbers are for reference only.

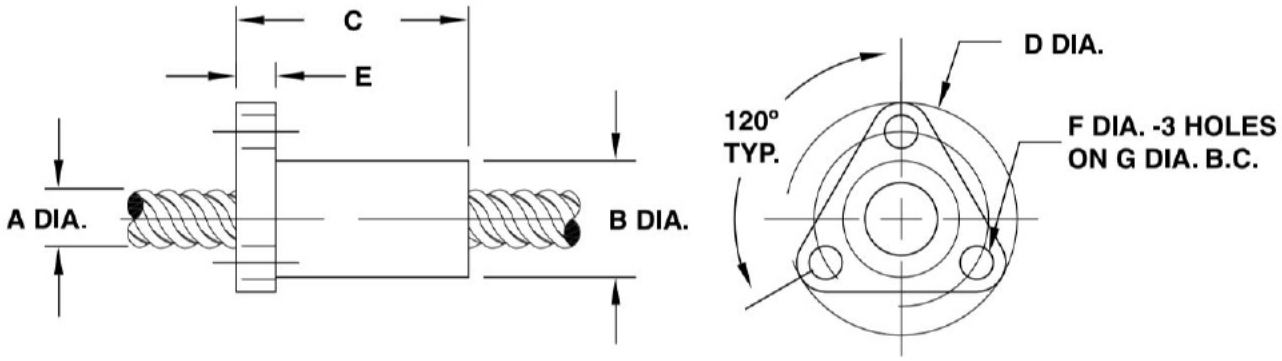

BFW Thread Mount

	Screw Diam. A inch (mm)	Nut Diam. B inch (mm)	Nut Length C inch (mm)	Thread M* inch	Thread Length N inch (mm)	Dynamic Load** lbs (Kg)
BFWT Thread Mount	1/4 (6)	.63 (15.9)	1.0 (25.4)	9/16 - 18	.187 (4.75)	50 (20)
	5/16 (8)	.75 (19.1)	1.0 (25.4)	5/8 - 18	.250 (6.35)	75 (35)
	3/8 (10)	.75 (19.1)	1.0 (25.4)	5/8 - 18	.250 (6.35)	75 (35)
	7/16 (11)	1.00 (25.4)	1.5 (38.1)	15/16 - 16	.375 (9.53)	90 (40)
	1/2 (13)	1.00 (25.4)	1.5 (38.1)	15/16 - 16	.375 (9.53)	150 (68)
	5/8 (16)	1.00 (25.4)	1.5 (38.1)	15/16 - 16	.375 (9.53)	225 (100)
	3/4 (19)	1.50 (38.1)	2.0 (51)	1 3/8 - 16	.500 (12.70)	350 (160)
	7/8 (22)	1.50 (38.1)	2.0 (51)	1 3/8 - 16	.500 (12.70)	500 (227)
	15/16 (24)	1.50 (38.1)	2.0 (51)	1 3/8 - 16	.500 (12.70)	500 (227)

Metric numbers are for reference only.

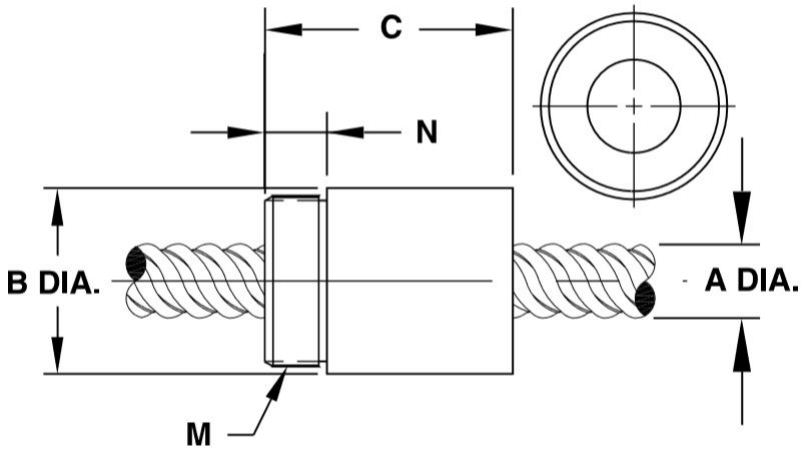

BFW Mini Rectangular Flange Mount

	Screw Diam. A inch (mm)	Nut Diam. B inch (mm)	Nut Length C inch (mm)	Flange Height D1 inch (mm)	Flange Diam. D inch (mm)	Flange Thickness E inch (mm)	Mounting Hole Diam. F inch (mm)	Bolt Circle Diam. G inch (mm)	Dynamic Load lbs (Kg)	Drag Torque oz-in (N-m)
BFWR Rectangular Flange Mount	1/8 inch through 7/32 inch (3 mm through 5.6 mm)	0.40 (10.2)	0.50 (13)	0.40 (10.2)	0.75 (19.1)	0.13 (3.2)	0.120 (3.05)	0.600 (15.24)	25 (11)	Free Wheeling

Metric numbers are for reference only.

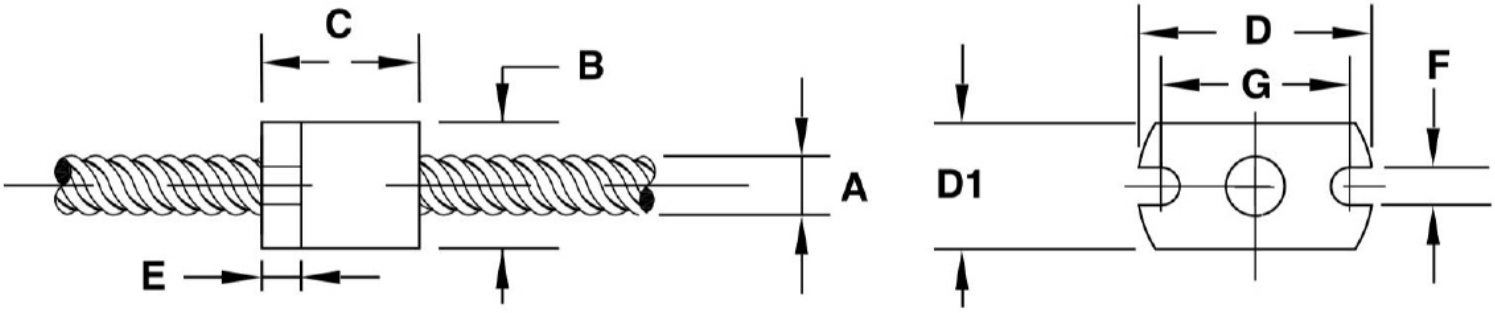

BFW Mini Thread Mount

	Screw Diam. A inch (mm)	Nut Diam. B inch (mm)	Nut Length C inch (mm)	Thread M* inch	Thread Length N inch (mm)	Dynamic Load lbs (Kg)	Drag Torque oz-in (N-m)
BFWT Thread Mount	1/8 inch through 7/32 inch (3 mm through 5.6 mm)	0.40 (10.2)	0.50 (13)	3/8-24	0.187 (4.75)	25 (11)	Free Wheeling

Metric numbers are for reference only.

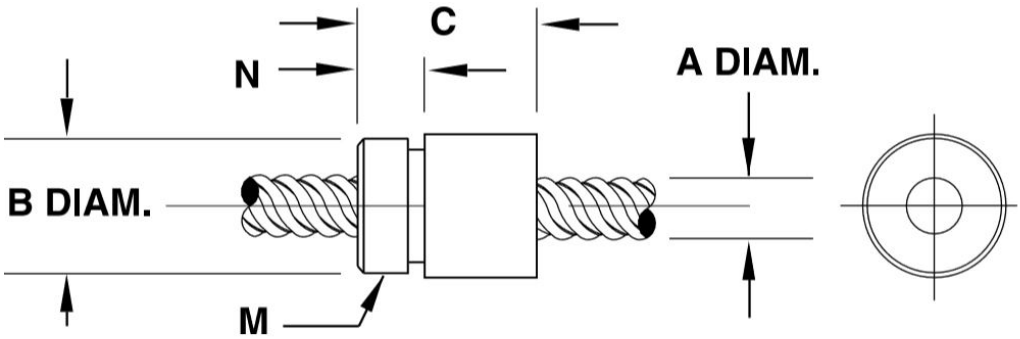

BFW Micro Barrel Mount

	Screw Diam. A inch (mm)	Nut Diam. B inch (mm)	Nut Length C inch (mm)	Nut Flats D inch (mm)	Dynamic Load lbs (Kg)	Drag Torque oz-in (N-m)
BFWB Barrel Mount	5/64 (2)	0.22 (5.5)	0.32 (8)	0.20 (5.08)	10 (4.5)	Free Wheeling

Metric numbers are for reference only.

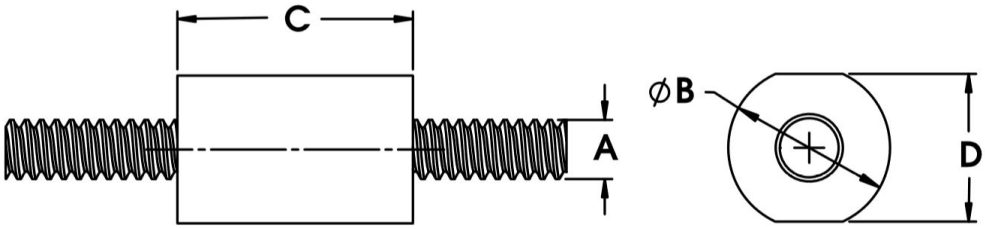

BFW Micro Rectangular Flange Mount

	Screw Diam. A inch (mm)	Nut Diam. B inch (mm)	Nut Length C inch (mm)	Flange Height D1 inch (mm)	Flange Diam. D inch (mm)	Flange Thickness E inch (mm)	Mounting Hole Diam. F inch (mm)	Bolt Circle Diam. G inch (mm)	Dynamic Load lbs (Kg)	Drag Torque oz-in (N-m)
BFWR Rectangular Flange Mount	5/64 (2)	0.22 (5.5)	0.32 (8)	0.22 (5.5)	0.47 (11.9)	0.08 (2.0)	0.07 (1.8)	0.35 (9.0)	10 (4.5)	Free Wheeling

Metric numbers are for reference only.

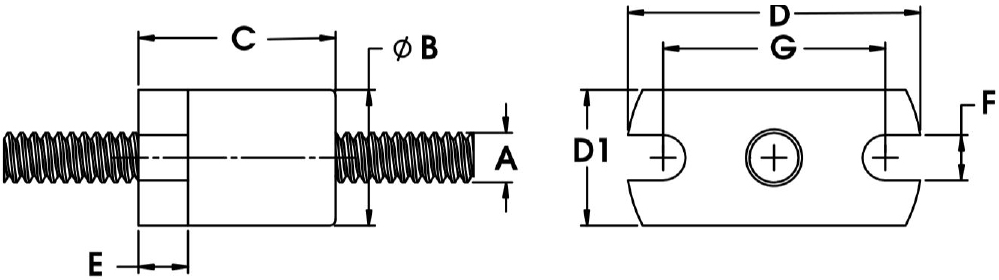

Lead Screw Compatibility: BFW Series

Diameter		Diameter Code	Lead		LEAD CODE	Left Hand Available	Outside Diameter (for reference)		Root Diameter (for reference)		Efficiency %*
inches	mm		inches	mm			inches	mm	inches	mm	
5/64	2	008	0.012	0.30	**0012**		0.079	2.01	0.068	1.73	24**
			0.016	0.40	**0016**		0.075	1.91	0.058	1.47	30**
			0.020	0.50	**0020**		0.077	1.96	0.057	1.45	36**
			0.039	1.00	**0039**		0.079	2.01	0.059	1.50	52**
			0.079	2.00	**0079**		0.077	1.96	0.057	1.45	66**
1/8	3.2	012	0.024	0.61	**0024**		0.129	3.28	0.093	2.36	44
			0.039	1.00	**0039**		0.129	3.28	0.094	2.39	57
			0.048	1.22	**0048**		0.129	3.28	0.093	2.36	61
			0.075	1.91	**0075**		0.129	3.28	0.093	2.36	70
			0.096	2.44	**0096**	•	0.129	3.28	0.093	2.36	75
			0.125	3.18	**0125**	LH Only	0.125	3.18	0.078	1.98	80
.132	3.3	013	0.020	0.50	**0020**		0.132	3.35	0.104	2.64	42
			0.039	1.00	**0039**		0.132	3.35	0.080	2.03	61
			0.079	2.00	**0079**		0.132	3.35	0.080	2.03	75
			0.157	4.00	**0157**		0.132	3.35	0.080	2.03	84
			0.315	8.00	**0315**		0.132	3.35	0.080	2.03	87
9/64	3.6	014	0.012	0.30	**0012**		0.140	3.56	0.123	3.12	26
			0.024	0.61	**0024**		0.140	3.56	0.105	2.67	43
			0.048	1.22	**0048**		0.140	3.56	0.081	2.06	62
			0.096	2.44	**0096**		0.140	3.56	0.081	2.06	75
			0.394	10.00	**0394**		0.140	3.56	0.102	2.59	86
5/32	4	016	0.033	0.84	**0033**	•	0.156	3.96	0.116	2.95	45
			0.050	1.27	**0050**	LH Only	0.156	3.96	0.096	2.44	59
			0.094	2.39	**0094**		0.164	4.17	0.128	3.25	67
			0.125	3.18	**0125**		0.168	4.27	0.130	3.30	74
			0.250	6.35	**0250**		0.156	3.96	0.130	3.30	83
			0.375	9.53	**0375**		0.156	3.96	0.130	3.30	85
			0.500	12.70	**0500**		0.156	3.96	0.130	3.30	86
3/16	5	018	0.020	0.50	**0020**		0.188	4.78	0.163	4.14	30
			0.025	0.64	**0025**		0.188	4.78	0.150	3.81	39
			0.039	1.00	**0039**		0.188	4.78	0.144	3.66	47
			0.050	1.27	**0050**		0.188	4.78	0.124	3.15	58
			0.100	2.54	**0100**		0.188	4.78	0.136	3.45	69
			0.1875	4.76	**0188**		0.188	4.78	0.167	4.24	78
			0.200	5.08	**0200**		0.188	4.78	0.124	3.15	82
			0.375	9.53	**0375**		0.188	4.78	0.161	4.09	84
			0.400	10.16	**0400**		0.188	4.78	0.124	3.15	84
			0.427	10.85	**0427**		0.188	4.78	0.162	4.11	85
			0.500	12.70	**0500**	•	0.188	4.78	0.142	3.61	86

Shaded areas have been translated from their designed inch or mm dimension to an equivalent mm or inch dimension.

* Listed efficiencies are theoretical values based on Kerkote® TFE coated lead screw
** Listed efficiencies for Micro screws are theoretical values based on non-coated lead screws
***Back-drive threshold is 50±10%

Lead Screw Compatibility: BFW Series

Diameter		Diameter Code	Lead		LEAD CODE	Left Hand Available	Outside Diameter (for reference)		Root Diameter (for reference)		Efficiency %*
inches	mm		inches	mm			inches	mm	inches	mm	
7/32	5.6	021	0.024	0.61	**0024**		0.218	5.54	0.181	4.60	31
			0.03125	0.79	**0031**		0.204	5.18	0.160	4.06	39
			0.048	1.22	**0048**		0.216	5.49	0.156	3.96	50
			0.050	1.27	**0050**		0.200	5.08	0.135	3.43	52
			0.0625	1.59	**0063**		0.218	5.54	0.142	3.61	60
			0.096	2.44	**0096**		0.218	5.54	0.156	3.96	66
			0.192	4.88	**0192**		0.218	5.54	0.156	3.96	78
			0.250	6.35	**0250**	•	0.204	5.18	0.140	3.56	81
			0.384	9.75	**0384**		0.218	5.54	0.159	4.04	86
1/4	6	025	0.024	0.61	**0024**		0.250	6.35	0.218	5.54	28
			0.025	0.64	**0025**		0.250	6.35	0.214	5.44	30
			0.03125	0.79	**0031**		0.250	6.35	0.208	5.28	34
			0.039	1.00	**0039**		0.250	6.35	0.190	4.83	40
			0.048	1.22	**0048**		0.250	6.35	0.190	4.83	45
			0.050	1.27	**0050**	•	0.250	6.35	0.191	4.85	46
			0.059	1.50	**0059**		0.250	6.35	0.172	4.37	52
			0.0625	1.59	**0063**		0.250	6.35	0.170	4.32	52
			0.079	2.00	**0079**		0.250	6.35	0.170	4.32	59
			0.096	2.44	**0096**		0.250	6.35	0.190	4.83	61
			0.100	2.54	**0100**		0.250	6.35	0.190	4.83	62
			0.118	3.00	**0118**		0.250	6.35	0.175	4.45	68
			0.125	3.18	**0125**		0.250	6.35	0.190	4.83	67
			0.197	5.00	**0197**		0.250	6.35	0.172	4.37	72
			0.200	5.08	**0200**		0.250	6.35	0.170	4.32	65
			0.250	6.35	**0250**	•	0.250	6.35	0.168	4.27	79
			0.3125	7.94	**0313**		0.250	6.35	0.184	4.67	81
			0.333	8.46	**0333**		0.250	6.35	0.170	4.32	82
			0.394	10.00	**0394**		0.250	6.35	0.170	4.32	78
			0.400	10.16	**0400**		0.250	6.35	0.170	4.32	84
			0.500	12.70	**0500**	•	0.250	6.35	0.169	4.29	85
			0.750	19.05	**0750**		0.250	6.35	0.170	4.32	86
			1.000	25.40	**1000**	•	0.250	6.35	0.170	4.32	84
5/16	8	031	0.039	1.00	**0039**		0.315	8.00	0.261	6.63	34
			0.057	1.44	**0057**		0.315	8.00	0.243	6.17	43
			0.0741	1.88	**0074**		0.312	7.92	0.211	5.36	51
			0.111	2.82	**0111**		0.312	7.92	0.232	5.89	60
			0.167	4.24	**0167**		0.312	7.92	0.211	5.36	69
			0.250	6.35	**0250**		0.312	7.92	0.234	5.94	76
			0.500	12.70	**0500**		0.312	7.92	0.232	5.89	83
			0.800	20.32	**0800**		0.306	7.77	0.243	6.17	86

Shaded areas have been translated from their designed inch or mm dimension to an equivalent mm or inch dimension.

* Listed efficiencies are theoretical values based on Kerkote® TFE coated lead screw
** Listed efficiencies for Micro screws are theoretical values based on non-coated lead screws
***Back-drive threshold is 50±10%

Lead Screw Compatibility: BFW Series

Diameter		Diameter Code	Lead		LEAD CODE	Left Hand Available	Outside Diameter (for reference)		Root Diameter (for reference)		Efficiency %*
inches	mm		inches	mm			inches	mm	inches	mm	
3/8	10	037	0.025	0.64	**0025**		0.375	9.53	0.337	8.56	21
			0.039	1.00	**0039**		0.394	10.01	0.350	8.89	28
			0.04167	1.06	**0042**		0.375	9.53	0.320	8.13	34
			0.050	1.27	**0050**	•	0.375	9.53	0.301	7.65	36
			0.055	1.40	**0055**		0.375	9.53	0.303	7.70	38
			0.059	1.50	**0059**	•	0.389	9.88	0.313	7.95	38
			0.0625	1.59	**0063**	•	0.388	9.86	0.295	7.49	41
			0.068	1.73	**0068**		0.388	9.86	0.295	7.49	42
			0.079	2.00	**0079**		0.375	9.53	0.264	6.71	47
			0.0833	2.12	**0083**		0.375	9.53	0.293	7.44	48
			0.100	2.54	**0100**	•	0.375	9.53	0.266	6.76	53
			0.125	3.18	**0125**	•	0.375	9.53	0.295	7.49	59
			0.157	4.00	**0157**		0.375	9.53	0.274	6.96	65
			0.1667	4.23	**0167**		0.371	9.42	0.261	6.63	61
			0.197	5.00	**0197**		0.375	9.53	0.266	6.76	69
			0.200	5.08	**0200**	•	0.375	9.53	0.266	6.76	69
			0.250	6.35	**0250**		0.375	9.53	0.268	6.81	70
			0.300	7.62	**0300**		0.375	9.53	0.255	6.48	76
			0.333	8.46	**0333**		0.375	9.53	0.245	6.22	78
			0.363	9.22	**0363**	•	0.375	9.53	0.260	6.60	79
			0.375	9.53	**0375**		0.375	9.53	0.265	6.73	79
			0.394	10.00	**0394**		0.375	9.53	0.260	6.60	79
			0.400	10.16	**0400**		0.375	9.53	0.293	7.44	79
			0.472	12.00	**0472**		0.388	9.86	0.287	7.29	82
			0.500	12.70	**0500**	•	0.388	9.86	0.265	6.73	81
			0.667	16.94	**0667**		0.375	9.53	0.273	6.93	83
			0.667	19.05	**0750**		0.388	9.86	0.273	6.93	84
			0.984	25.00	**0984**		0.375	9.53	0.262	6.65	84
			1.000	25.40	**1000**		0.383	9.73	0.254	6.45	84
			1.200	30.48	**1200**	•	0.383	9.73	0.254	6.45	84
			1.250	31.75	**1250**		0.375	9.53	0.278	7.06	84
			1.500	38.10	**1500**		0.375	9.53	0.264	6.71	83
7/16	11	043	0.050	1.27	**0050**		0.437	11.10	0.362	9.19	30
			0.0625	1.59	**0063**	•	0.436	11.07	0.358	9.09	38
			0.079	2.00	**0079**		0.472	11.99	0.374	9.50	42
			0.111	2.82	**0111**		0.437	11.10	0.327	8.31	52
			0.118	3.00	**0118**		0.438	11.13	0.363	9.22	52
			0.125	3.18	**0125**		0.438	11.13	0.357	9.07	54
			0.197	5.00	**0197**		0.438	11.13	0.315	8.00	65
			0.236	6.00	**0236**		0.433	11.00	0.313	7.95	70
			0.250	6.35	**0250**		0.442	11.23	0.325	8.26	70
			0.307	7.80	**0307**		0.445	11.30	0.343	8.71	73
			0.325	8.26	**0325**		0.444	11.28	0.342	8.69	74
			0.394	10.00	**0394**		0.446	11.33	0.331	8.41	78
			0.472	12.00	**0472**		0.438	11.13	0.318	8.08	80
			0.500	12.70	**0500**		0.452	11.48	0.327	8.31	80
			0.615	15.62	**0615**		0.475	12.07	0.376	9.55	82

Lead Screw Compatibility: BFW Series

Diameter		Diameter Code	Lead		LEAD CODE	Left Hand Available	Outside Diameter (for reference)		Root Diameter (for reference)		Efficiency %*
inches	mm		inches	mm			inches	mm	inches	mm	
1/2	13	050	0.050	1.27	**0050**		0.495	12.57	0.433	11.00	29
			0.079	2.00	**0079**		0.473	12.01	0.355	9.02	41
			0.098	2.50	**0098**		0.500	12.70	0.383	9.73	46
			0.100	2.54	**0100**	•	0.490	12.45	0.364	9.25	46
			0.125	3.18	**0125**		0.500	12.70	0.374	9.50	51
			0.157	4.00	**0157**		0.500	12.70	0.384	9.75	58
			0.160	4.06	**0160**		0.500	12.70	0.388	9.86	67
			0.1667	4.23	**0167**		0.500	12.70	0.384	9.75	58
			0.197	5.00	**0197**		0.500	12.70	0.365	9.27	62
			0.200	5.08	**0200**	•	0.492	12.50	0.366	9.30	63
			0.250	6.35	**0250**		0.500	12.70	0.382	9.70	67
			0.333	8.46	**0333**	•	0.497	12.62	0.362	9.19	73
			0.394	10.00	**0394**		0.497	12.62	0.362	9.19	76
			0.400	10.16	**0400**		0.497	12.62	0.364	9.25	76
			0.500	12.70	**0500**		0.488	12.40	0.352	8.94	79
			0.630	16.00	**0630**		0.500	12.70	0.374	9.50	80
			0.750	19.05	**0750**		0.525	13.34	0.399	10.13	83
			0.800	20.32	**0800**		0.500	12.70	0.370	9.40	83
			0.984	25.00	**0984**		0.500	12.70	0.369	9.37	84
			1.000	25.40	**1000**	•	0.490	12.45	0.372	9.45	84
			1.500	38.10	**1500**		0.490	12.45	0.374	9.50	85
			2.000	50.80	**2000**		0.488	12.40	0.378	9.60	87
5/8	16	062	0.100	2.54	**0100**		0.615	15.62	0.498	12.65	40
			0.125	3.18	**0125**	•	0.625	15.88	0.470	11.94	45
			0.200	5.08	**0200**		0.625	15.88	0.495	12.57	53
			0.250	6.35	**0250**		0.625	15.88	0.469	11.91	63
			0.315	8.00	**0315**		0.627	15.93	0.493	12.52	68
			0.410	10.41	**0410**	•	0.625	15.88	0.481	12.22	72
			0.500	12.70	**0500**	•	0.625	15.88	0.478	12.14	76
			0.630	16.00	**0630**		0.625	15.88	0.491	12.47	78
			1.000	25.40	**1000**		0.625	15.88	0.481	12.22	83
			1.500	38.10	**1500**		0.625	15.88	0.499	12.67	85
			1.575	40.00	**1575**	•	0.625	15.88	0.499	12.67	86
			2.000	50.80	**2000**	•	0.625	15.88	0.499	12.67	86

Shaded areas have been translated from their designed inch or mm dimension to an equivalent mm or inch dimension.

* Listed efficiencies are theoretical values based on Kerkote® TFE coated lead screw
** Listed efficiencies for Micro screws are theoretical values based on non-coated lead screws
***Back-drive threshold is 50±10%

Lead Screw Compatibility: BFW Series

Diameter		Diameter Code	Lead		LEAD CODE	Left Hand Available	Outside Diameter (for reference)		Root Diameter (for reference)		Efficiency %*
inches	mm		inches	mm			inches	mm	inches	mm	
3/4	19	075	0.0625	1.59	**0063**		0.750	19.05	0.671	17.04	25
			0.098	2.50	**0098**		0.742	18.85	0.626	15.90	35
			0.100	2.54	**0100**	•	0.746	18.95	0.624	15.85	35
			0.1667	4.23	**0167**		0.727	18.47	0.645	16.38	47
			0.197	5.00	**0197**		0.745	18.92	0.624	15.85	51
			0.200	5.08	**0200**		0.741	18.82	0.632	16.05	52
			0.250	6.35	**0250**		0.731	18.57	0.639	16.23	57
			0.276	7.00	**0276**		0.750	19.05	0.624	15.85	59
			0.333	8.46	**0333**		0.750	19.05	0.624	15.85	64
			0.394	10.00	**0394**		0.745	18.92	0.619	15.72	67
			0.500	12.70	**0500**		0.744	18.90	0.624	15.85	73
			0.551	14.00	**0551**		0.750	19.05	0.624	15.85	73
			0.591	15.00	**0591**		0.749	19.02	0.623	15.82	74
			0.709	18.00	**0709**		0.780	19.81	0.650	16.51	77
			0.748	19.00	**0748**		0.672	17.07	0.547	13.89	80
			0.787	20.00	**0787**		0.780	19.81	0.648	16.46	78
			0.800	20.32	**0800**		0.750	19.05	0.618	15.70	79
			0.945	24.00	**0945**	•	0.734	18.64	0.633	16.08	80
			1.000	25.40	**1000**	•	0.743	18.87	0.619	15.72	81
			1.500	38.10	**1500**		0.712	18.08	0.590	14.99	84
			1.969	50.00	**1969**	•	0.751	19.08	0.620	15.75	84
			2.000	50.80	**2000**	•	0.742	18.85	0.611	15.52	84
			2.400	60.96	**2400**	•	0.750	19.05	0.620	15.75	84
			3.622	92.00	**3622**	•	0.750	19.05	0.634	16.10	87
7/8	22	087	0.200	5.08	**0200**	•	0.870	22.10	0.742	18.85	48
			0.236	6.00	**0236**		0.848	21.54	0.773	19.63	52
			0.250	6.35	**0250**		0.875	22.23	0.749	19.02	53
			0.394	10.00	**0394**		0.875	22.23	0.741	18.82	65
			0.500	12.70	**0500**		0.862	21.89	0.744	18.90	69
			0.630	16.00	**0630**		0.875	22.23	0.741	18.82	73
			0.667	16.94	**0667**		0.871	22.12	0.745	18.92	74
			0.787	20.00	**0787**		0.875	22.23	0.741	18.82	78
			0.945	24.00	**0945**		0.875	22.23	0.741	18.82	79
			1.000	25.40	**1000**		0.871	22.12	0.742	18.85	80
15/16	24	093	0.050	1.27	**0050**	LH Only	0.938	23.83	0.874	22.20	17
			2.000	50.80	**2000**		0.927	23.55	0.815	20.70	85
			3.000	76.20	**3000**	•	0.939	23.85	0.803	20.40	86

Shaded areas have been translated from their designed inch or mm dimension to an equivalent mm or inch dimension.

* Listed efficiencies are theoretical values based on Kerkote® TFE coated lead screw
** Listed efficiencies for Micro screws are theoretical values based on non-coated lead screws
***Back-drive threshold is 50±10%

Lead Screws

Kerk Lead Screws utilize the latest in precision rolling technology. Lead screws are available in standard diameters from 5/64” to 15/16” and includes metric and left hand threads. Most standard lead screws are manufactured from 303 stainless steel and are produced using our exclusive precision rolling process. Other lead screw materials are available for application specific requirements.

Kerk® Lead Screws

Manufactured from 303 stainless steel and produced with Kerk's exclusive precision rolling process. Available in standard diameters from 1/8-in (3.2mm) to 15/16-in (23mm), with standard leads from .012-in to almost 4-in (0.30mm to 92mm) including metric and left hand threads. Custom sizes and leads can be special ordered. Positional bi-directional repeatability (with Kerk anti-backlash nut) is within 50 micro-inches (1.25 micron) and standard lead accuracy is better than 0.0006-in./in. (mm/mm). Lead accuracies are available to .0001-in./in. (mm/mm). The surface finish is better than 16 micro-inches (0.4 µm). Please consult factory for more details. Kerk stainless steel lead screws and guide rails are corrosion resistant, non-magnetic, and compatible with many demanding processes.

Identifying the Lead Screw Part Number Codes when Ordering

LSS	S	K	R	—	025	—	0024	—	EY10
Prefix	**Nut Mounting Style**	**Lubrication**	**Thread Direction**		**Diameter Code**		**Nominal Thread Lead Code**		**Unique Identifier**
LSS = Screw Only	**S** = Screw Only **X** = Custom	**S =** Uncoated **K =** Kerkote® TFE Coating **G =** Grease **N =** Nut only **B =** Black Ice® TFE Coating	**R =** Right hand **L =** Left hand (Refer to lead screw charts for availability		**008** [µ] = .078-in (2) **012**[m] = .125-in (3.2) **013**[m] = .133-in (3.3 **014**[m] = .141-in (3.6) **016**[m] = .156-in (4) **018**[m] = .188-in (5) **021**[m] = .219-in (5.6) **025** = .250-in (6) **031** = .313-in (8) **037** = .375-in (10) **043** = .438-in (11) **050** = .500-in (13) **062** = .625-in (16) **075** = .750-in (19) **087** = .875-in (22) **093** = .938-in (24) [m] **BFW Mini Series** [µ] **BFW Micro Series**		(Refer to LEAD CODE Specifications charts, pages 2 to 6)		**FY06 =** 6" CTL Kerk threadform **EY10 =** 10" C-T-L Haydon threadform

NOTE: Dashes must be included in Part Number (–) as shown above. For assistance call our Engineering Team at 603 213 6290.

Material & Teflon TFE Coating Options

Materials		Teflon TFE Coatings	
Kerkite® Composite Polymer Nuts	In addition to the Kerk® self-lubricating acetal nut material, we offer a variety of custom compounded Kerkite composite polymers. Kerkite polymers are a family of high performance materials that offer exceptional wear properties with the cost and design advantages afforded through injection molding. Kerkite polymers offer a variety of mechanical, thermal and electrical properties and are compatible with many chemicals and environmental conditions. Each member of the Kerkite family is compounded with lubricants, reinforcements and thermoplastic polymers formulated to provide optimum performance in its target conditions and applications.	**Kerkote® TFE Coating**	Soft coating that is a long-term. maintenance-free. dry lubricant, optimized for softer plastics like acetals and nylons, with or without mechanical reinforcement. Lubrication to the nut/screw interface occurs by the nut picking up Kerkote® TFE particles from the coating as well as from the migration of the internal lubricant within the plastic nut. The transfer of TFE to the nut continues throughout the operating life of the assembly as long as the nut periodically travels over areas with Kerkote® TFE coating. The lubricant, although solid, also has some "spreading" ability as in fluid lubricants. Kerkote® TFE coated screws provide the maximum level of self-lubrication and should not be additionally lubricated or used in environments where oils or other lubricant contamination is possible.
Special Materials	Kerk® has rolled screws in many materials, including 316 stainless, 400 series stainless, precipitate hardening materials, carbon steel, aluminum, and titanium. Kerk® nuts have been produced in many alternative plastics including PEEK, polyester, Torlon®, Vespel®, PVDF, UHMW, Ertalyte®, customer-supplied specialty materials, and metal nuts made from bronze, brass, and stainless steel. If the material can be molded, machined, ground, or rolled, we can likely process it.	**Black Ice® TFE Coating**	Hard coating that is long term, maintenance-free and is exceptionally durable in all types of environments, with virtually any type of polymer nut. Black Ice® TFE coating remains on the screw, offering a low friction surface upon which the nut travels. Rather than acting as a dry lubricant, Black Ice® TFE is an anti-friction coating whose surface properties displace the metal to which it is applied. Though it is not intended for use with metal or glass fiber reinforced nuts, Black Ice® TFE is bonded securely to the screw's surface and can withstand abrasion from contamination, rigid polymer systems, fluid impingement and wash down applications. Black Ice® TFE can be used in more aggressive environment conditions, or anywhere reduced friction and a permanent coating is desired. Not intended to be used with additional lubricants.

Note: There are certain applications where external lubrication may be desired. These include the use of nut materials such as glass reinforced plastic or metal.Greases, when used properly can provide unique capabilities and Haydon Kerk Motion Solutions does offer a selection of greases developed specifically for these applications. Please contact a sales engineer for assistance selecting the best lubricant for your requirements.

Diameter and Lead Codes

Diameter		Diameter Code	Lead		LEAD CODE	Left Hand Available	Outside Diameter (for reference)		Root Diameter (for reference)		Efficiency %*
inches	mm		inches	mm			inches	mm	inches	mm	
5/64 (.078) Micro Series	2	008 μ	0.012	0.30	0012		0.079	2.01	0.068	1.73	24**
			0.016	0.40	0016		0.075	1.91	0.058	1.47	30**
			0.020	0.50	0020		0.077	1.96	0.057	1.45	36**
			0.039	1.00	0039		0.079	2.01	0.059	1.50	52**
			0.079	2.00	0079		0.077	1.96	0.057	1.45	66**
1/8 (.125)	3.2	012 m	0.024	0.61	0024		0.129	3.28	0.093	2.36	44
			0.039	1.00	0039		0.129	3.28	0.094	2.39	57
			0.048	1.22	0048		0.129	3.28	0.093	2.36	61
			0.075	1.91	0075		0.129	3.28	0.093	2.36	70
			0.096	2.44	0096	•	0.129	3.28	0.093	2.36	75
			0.125	3.18	0125	LH Only	0.125	3.18	0.078	1.98	80
17/128 (.132)	3.3	013 m	0.020	0.50	0020		0.132	3.35	0.104	2.64	42
			0.039	1.00	0039		0.132	3.35	0.080	2.03	61
			0.079	2.00	0079		0.132	3.35	0.080	2.03	75
			0.157	4.00	0157		0.132	3.35	0.080	2.03	84
			0.315	8.00	0315		0.132	3.35	0.080	2.03	87
9/64 (.141)	3.6	014 m	0.012	0.30	0012		0.140	3.56	0.123	3.12	26
			0.024	0.61	0024		0.140	3.56	0.105	2.67	43
			0.048	1.22	0048		0.140	3.56	0.081	2.06	62
			0.096	2.44	0096		0.140	3.56	0.081	2.06	75
			0.394	10.00	0394		0.140	3.56	0.102	2.59	86
5/32 (.156)	4	016 m	0.033	0.84	0033	•	0.156	3.96	0.116	2.95	45
			0.050	1.27	0050	LH Only	0.156	3.96	0.096	2.44	59
			0.094	2.39	0094		0.164	4.17	0.128	3.25	67
			0.125	3.18	0125		0.168	4.27	0.130	3.30	74
			0.250	6.35	0250		0.156	3.96	0.130	3.30	83
			0.375	9.53	0375		0.156	3.96	0.130	3.30	85
			0.500	12.70	0500		0.156	3.96	0.130	3.30	86
316 (.188)	5	018 m	0.020	0.50	0020		0.188	4.78	0.163	4.14	30
			0.025	0.64	0025		0.188	4.78	0.150	3.81	39
			0.039	1.00	0039		0.188	4.78	0.144	3.66	47
			0.050	1.27	0050		0.188	4.78	0.124	3.15	58
			0.100	2.54	0100		0.188	4.78	0.136	3.45	69
			0.1875	4.76	0188		0.188	4.78	0.167	4.24	78
			0.200	5.08	0200		0.188	4.78	0.124	3.15	82
			0.375	9.53	0375		0.188	4.78	0.161	4.09	84
			0.400	10.16	0400		0.188	4.78	0.124	3.15	84
			0.427	10.85	0427		0.188	4.78	0.162	4.11	85
			0.500	12.70	0500	•	0.188	4.78	0.142	3.61	86

Shaded areas have been translated from their designed inch or mm dimension to an equivalent mm or inch dimension.

* Listed efficiencies are theoretical values based on Kerkote® TFE coated lead screw
** Listed efficiencies for Micro screws are theoretical values based on non-coated lead screws
***Back-drive threshold is 50±10%

Diameter and Lead Codes

Diameter		Diameter Code	Lead		LEAD CODE	Left Hand Available	Outside Diameter (for reference)		Root Diameter (for reference)		Efficiency %*
inches	mm		inches	mm			inches	mm	inches	mm	
7/32 (.219)	5.6	021[m]	0.024	0.61	**0024**		0.218	5.54	0.181	4.60	31
			0.03125	0.79	**0031**		0.204	5.18	0.160	4.06	39
			0.048	1.22	**0048**		0.216	5.49	0.156	3.96	50
			0.050	1.27	**0050**		0.200	5.08	0.135	3.43	52
			0.0625	1.59	**0063**		0.218	5.54	0.142	3.61	60
			0.096	2.44	**0096**		0.218	5.54	0.156	3.96	66
			0.192	4.88	**0192**		0.218	5.54	0.156	3.96	78
			0.250	6.35	**0250**	•	0.204	5.18	0.140	3.56	81
			0.384	9.75	**0384**		0.218	5.54	0.159	4.04	86
1/4 (.250)	6	025	0.024	0.61	**0024**		0.250	6.35	0.218	5.54	28
			0.025	0.64	**0025**		0.250	6.35	0.214	5.44	30
			0.03125	0.79	**0031**		0.250	6.35	0.208	5.28	34
			0.039	1.00	**0039**		0.250	6.35	0.190	4.83	40
			0.048	1.22	**0048**		0.250	6.35	0.190	4.83	45
			0.050	1.27	**0050**	•	0.250	6.35	0.191	4.85	46
			0.059	1.50	**0059**		0.250	6.35	0.172	4.37	52
			0.0625	1.59	**0063**		0.250	6.35	0.170	4.32	52
			0.079	2.00	**0079**		0.250	6.35	0.170	4.32	59
			0.096	2.44	**0096**		0.250	6.35	0.190	4.83	61
			0.100	2.54	**0100**		0.250	6.35	0.190	4.83	62
			0.118	3.00	**0118**		0.250	6.35	0.175	4.45	68
			0.125	3.18	**0125**		0.250	6.35	0.190	4.83	67
			0.197	5.00	**0197**		0.250	6.35	0.172	4.37	72
			0.200	5.08	**0200**		0.250	6.35	0.170	4.32	65
			0.250	6.35	**0250**	•	0.250	6.35	0.168	4.27	79
			0.3125	7.94	**0313**		0.250	6.35	0.184	4.67	81
			0.333	8.46	**0333**		0.250	6.35	0.170	4.32	82
			0.394	10.00	**0394**		0.250	6.35	0.170	4.32	78
			0.400	10.16	**0400**		0.250	6.35	0.170	4.32	84
			0.500	12.70	**0500**	•	0.250	6.35	0.169	4.29	85
			0.750	19.05	**0750**		0.250	6.35	0.170	4.32	86
			1.000	25.40	**1000**	•	0.250	6.35	0.170	4.32	84
5/16 (.313)	8	031	0.039	1.00	**0039**		0.315	8.00	0.261	6.63	34
			0.057	1.44	**0057**		0.315	8.00	0.243	6.17	43
			0.0741	1.88	**0074**		0.312	7.92	0.211	5.36	51
			0.111	2.82	**0111**		0.312	7.92	0.232	5.89	60
			0.167	4.24	**0167**		0.312	7.92	0.211	5.36	69
			0.250	6.35	**0250**		0.312	7.92	0.234	5.94	76
			0.500	12.70	**0500**		0.312	7.92	0.232	5.89	83
			0.800	20.32	**0800**		0.306	7.77	0.243	6.17	86

Shaded areas have been translated from their designed inch or mm dimension to an equivalent mm or inch dimension.

* Listed efficiencies are theoretical values based on Kerkote® TFE coated lead screw
** Listed efficiencies for Micro screws are theoretical values based on non-coated lead screws
***Back-drive threshold is 50±10%

Diameter and Lead Codes

Diameter		Diameter Code	Lead		LEAD CODE	Left Hand Available	Outside Diameter (for reference)		Root Diameter (for reference)		Efficiency %*
inches	mm		inches	mm			inches	mm	inches	mm	
3/8 (.375)	10	037	0.025	0.64	**0025**		0.375	9.53	0.337	8.56	21
			0.039	1.00	**0039**		0.394	10.01	0.350	8.89	28
			0.04167	1.06	**0042**		0.375	9.53	0.320	8.13	34
			0.050	1.27	**0050**	•	0.375	9.53	0.301	7.65	36
			0.055	1.40	**0055**		0.375	9.53	0.303	7.70	38
			0.059	1.50	**0059**	•	0.389	9.88	0.313	7.95	38
			0.0625	1.59	**0063**	•	0.388	9.86	0.295	7.49	41
			0.068	1.73	**0068**		0.388	9.86	0.295	7.49	42
			0.079	2.00	**0079**		0.375	9.53	0.264	6.71	47
			0.0833	2.12	**0083**		0.375	9.53	0.293	7.44	48
			0.100	2.54	**0100**	•	0.375	9.53	0.266	6.76	53
			0.125	3.18	**0125**	•	0.375	9.53	0.295	7.49	59
			0.157	4.00	**0157**		0.375	9.53	0.274	6.96	65
			0.1667	4.23	**0167**		0.371	9.42	0.261	6.63	61
			0.197	5.00	**0197**		0.375	9.53	0.266	6.76	69
			0.200	5.08	**0200**	•	0.375	9.53	0.266	6.76	69
			0.250	6.35	**0250**		0.375	9.53	0.268	6.81	70
			0.300	7.62	**0300**		0.375	9.53	0.255	6.48	76
			0.333	8.46	**0333**		0.375	9.53	0.245	6.22	78
			0.363	9.22	**0363**	•	0.375	9.53	0.260	6.60	79
			0.375	9.53	**0375**		0.375	9.53	0.265	6.73	79
			0.394	10.00	**0394**		0.375	9.53	0.260	6.60	79
			0.400	10.16	**0400**		0.375	9.53	0.293	7.44	79
			0.472	12.00	**0472**		0.388	9.86	0.287	7.29	82
			0.500	12.70	**0500**	•	0.388	9.86	0.265	6.73	81
			0.667	16.94	**0667**		0.375	9.53	0.273	6.93	83
			0.667	19.05	**0750**		0.388	9.86	0.273	6.93	84
			0.984	25.00	**0984**		0.375	9.53	0.262	6.65	84
			1.000	25.40	**1000**		0.383	9.73	0.254	6.45	84
			1.200	30.48	**1200**	•	0.383	9.73	0.254	6.45	84
			1.250	31.75	**1250**		0.375	9.53	0.278	7.06	84
			1.500	38.10	**1500**		0.375	9.53	0.264	6.71	83
7/16 (.438)	11	043	0.050	1.27	**0050**		0.437	11.10	0.362	9.19	30
			0.0625	1.59	**0063**	•	0.436	11.07	0.358	9.09	38
			0.079	2.00	**0079**		0.472	11.99	0.374	9.50	42
			0.111	2.82	**0111**		0.437	11.10	0.327	8.31	52
			0.118	3.00	**0118**		0.438	11.13	0.363	9.22	52
			0.125	3.18	**0125**		0.438	11.13	0.357	9.07	54
			0.197	5.00	**0197**		0.438	11.13	0.315	8.00	65
			0.236	6.00	**0236**		0.433	11.00	0.313	7.95	70
			0.250	6.35	**0250**		0.442	11.23	0.325	8.26	70
			0.307	7.80	**0307**		0.445	11.30	0.343	8.71	73
			0.325	8.26	**0325**		0.444	11.28	0.342	8.69	74
			0.394	10.00	**0394**		0.446	11.33	0.331	8.41	78
			0.472	12.00	**0472**		0.438	11.13	0.318	8.08	80
			0.500	12.70	**0500**		0.452	11.48	0.327	8.31	80
			0.615	15.62	**0615**		0.475	12.07	0.376	9.55	82

Shaded areas have been translated from their designed inch or mm dimension to an equivalent mm or inch dimension.

* Listed efficiencies are theoretical values based on Kerkote® TFE coated lead screw
** Listed efficiencies for Micro screws are theoretical values based on non-coated lead screws
***Back-drive threshold is 50±10%

Diameter and Lead Codes

Diameter		Diameter Code	Lead		LEAD CODE	Left Hand Available	Outside Diameter (for reference)		Root Diameter (for reference)		Efficiency %*
inches	mm		inches	mm			inches	mm	inches	mm	
1/2 (.500)	13	050	0.050	1.27	**0050**		0.495	12.57	0.433	11.00	29
			0.079	2.00	**0079**		0.473	12.01	0.355	9.02	41
			0.098	2.50	**0098**		0.500	12.70	0.383	9.73	46
			0.100	2.54	**0100**	•	0.490	12.45	0.364	9.25	46
			0.125	3.18	**0125**		0.500	12.70	0.374	9.50	51
			0.157	4.00	**0157**		0.500	12.70	0.384	9.75	58
			0.160	4.06	**0160**		0.500	12.70	0.388	9.86	67
			0.1667	4.23	**0167**		0.500	12.70	0.384	9.75	58
			0.197	5.00	**0197**		0.500	12.70	0.365	9.27	62
			0.200	5.08	**0200**	•	0.492	12.50	0.366	9.30	63
			0.250	6.35	**0250**		0.500	12.70	0.382	9.70	67
			0.333	8.46	**0333**	•	0.497	12.62	0.362	9.19	73
			0.394	10.00	**0394**		0.497	12.62	0.362	9.19	76
			0.400	10.16	**0400**		0.497	12.62	0.364	9.25	76
			0.500	12.70	**0500**		0.488	12.40	0.352	8.94	79
			0.630	16.00	**0630**		0.500	12.70	0.374	9.50	80
			0.750	19.05	**0750**		0.525	13.34	0.399	10.13	83
			0.800	20.32	**0800**		0.500	12.70	0.370	9.40	83
			0.984	25.00	**0984**		0.500	12.70	0.369	9.37	84
			1.000	25.40	**1000**	•	0.490	12.45	0.372	9.45	84
			1.500	38.10	**1500**		0.490	12.45	0.374	9.50	85
			2.000	50.80	**2000**		0.488	12.40	0.378	9.60	87
5/8 (.625)	16	062	0.100	2.54	**0100**		0.615	15.62	0.498	12.65	40
			0.125	3.18	**0125**	•	0.625	15.88	0.470	11.94	45
			0.200	5.08	**0200**		0.625	15.88	0.495	12.57	53
			0.250	6.35	**0250**		0.625	15.88	0.469	11.91	63
			0.315	8.00	**0315**		0.627	15.93	0.493	12.52	68
			0.410	10.41	**0410**	•	0.625	15.88	0.481	12.22	72
			0.500	12.70	**0500**	•	0.625	15.88	0.478	12.14	76
			0.630	16.00	**0630**		0.625	15.88	0.491	12.47	78
			1.000	25.40	**1000**		0.625	15.88	0.481	12.22	83
			1.500	38.10	**1500**		0.625	15.88	0.499	12.67	85
			1.575	40.00	**1575**	•	0.625	15.88	0.499	12.67	86
			2.000	50.80	**2000**	•	0.625	15.88	0.499	12.67	86

Shaded areas have been translated from their designed inch or mm dimension to an equivalent mm or inch dimension.

* Listed efficiencies are theoretical values based on Kerkote® TFE coated lead screw
** Listed efficiencies for Micro screws are theoretical values based on non-coated lead screws
***Back-drive threshold is 50±10%

Diameter and Lead Codes

Diameter		Diameter Code	Lead		LEAD CODE	Left Hand Available	Outside Diameter (for reference)		Root Diameter (for reference)		Efficiency %*
inches	mm		inches	mm			inches	mm	inches	mm	
3/4 (.750)	19	075	0.0625	1.59	**0063**		0.750	19.05	0.671	17.04	25
			0.098	2.50	**0098**		0.742	18.85	0.626	15.90	35
			0.100	2.54	**0100**	•	0.746	18.95	0.624	15.85	35
			0.1667	4.23	**0167**		0.727	18.47	0.645	16.38	47
			0.197	5.00	**0197**		0.745	18.92	0.624	15.85	51
			0.200	5.08	**0200**		0.741	18.82	0.632	16.05	52
			0.250	6.35	**0250**		0.731	18.57	0.639	16.23	57
			0.276	7.00	**0276**		0.750	19.05	0.624	15.85	59
			0.333	8.46	**0333**		0.750	19.05	0.624	15.85	64
			0.394	10.00	**0394**		0.745	18.92	0.619	15.72	67
			0.500	12.70	**0500**		0.744	18.90	0.624	15.85	73
			0.551	14.00	**0551**		0.750	19.05	0.624	15.85	73
			0.591	15.00	**0591**		0.749	19.02	0.623	15.82	74
			0.709	18.00	**0709**		0.780	19.81	0.650	16.51	77
			0.748	19.00	**0748**		0.672	17.07	0.547	13.89	80
			0.787	20.00	**0787**		0.780	19.81	0.648	16.46	78
			0.800	20.32	**0800**		0.750	19.05	0.618	15.70	79
			0.945	24.00	**0945**	•	0.734	18.64	0.633	16.08	80
			1.000	25.40	**1000**	•	0.743	18.87	0.619	15.72	81
			1.500	38.10	**1500**		0.712	18.08	0.590	14.99	84
			1.969	50.00	**1969**	•	0.751	19.08	0.620	15.75	84
			2.000	50.80	**2000**	•	0.742	18.85	0.611	15.52	84
			2.400	60.96	**2400**	•	0.750	19.05	0.620	15.75	84
			3.622	92.00	**3622**	•	0.750	19.05	0.634	16.10	87
7/8 (.875)	22	087	0.200	5.08	**0200**	•	0.870	22.10	0.742	18.85	48
			0.236	6.00	**0236**		0.848	21.54	0.773	19.63	52
			0.250	6.35	**0250**		0.875	22.23	0.749	19.02	53
			0.394	10.00	**0394**		0.875	22.23	0.741	18.82	65
			0.500	12.70	**0500**		0.862	21.89	0.744	18.90	69
			0.630	16.00	**0630**		0.875	22.23	0.741	18.82	73
			0.667	16.94	**0667**		0.871	22.12	0.745	18.92	74
			0.787	20.00	**0787**		0.875	22.23	0.741	18.82	78
			0.945	24.00	**0945**		0.875	22.23	0.741	18.82	79
			1.000	25.40	**1000**		0.871	22.12	0.742	18.85	80
5/16 (.938)	24	093	0.050	1.27	**0050**	LH Only	0.938	23.83	0.874	22.20	17
			2.000	50.80	**2000**		0.927	23.55	0.815	20.70	85
			3.000	76.20	**3000**	•	0.939	23.85	0.803	20.40	86

Shaded areas have been translated from their designed inch or mm dimension to an equivalent mm or inch dimension.

* Listed efficiencies are theoretical values based on Kerkote® TFE coated lead screw
** Listed efficiencies for Micro screws are theoretical values based on non-coated lead screws
***Back-drive threshold is 50±10%

Screw Inertia

Screw Size inch [mm]	Screw Inertia [oz-inch–sec2/inch]	[g-cm2/cm]
5/64 (2)	3.4×10^{-8}	9.5×10^{-4}
1/8 (3.2)	1.8×10^{-7}	5.0×10^{-3}
9/64 (3.5)	3.4×10^{-7}	9.5×10^{-3}
5/32 (3.97)	4.9×10^{-7}	1.4×10^{-2}
3/16 (4.76)	1.1×10^{-6}	3.1×10^{-2}
7/32 (5.55)	1.8×10^{-6}	5.0×10^{-2}
1/4 (6)	3×10^{-5}	8.3×10^{-2}
5/16 (8)	5×10^{-5}	1.4
3/8 (10)	1.5×10^{-5}	0.4
7/16 (11)	3.5×10^{-5}	1.0
1/2 (13)	5.2×10^{-5}	1.4
5/8 (16)	14.2×10^{-5}	3.9
3/4 (19)	30.5×10^{-5}	8.5
7/8 (22)	58.0×10^{-5}	16.1
15/16 (24)	73.0×10^{-5}	20.3

Standard End Machining mm[inches]

Cross Drilled Hole

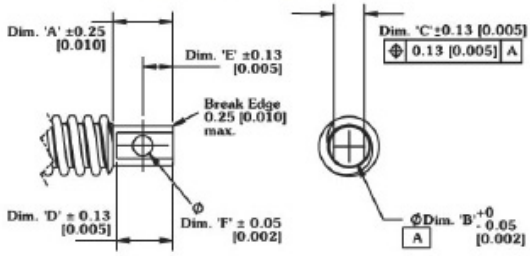

Turned Journal

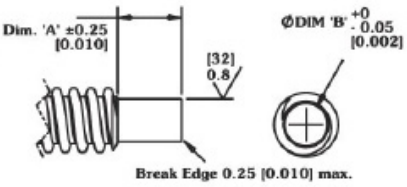

Hex Drive End

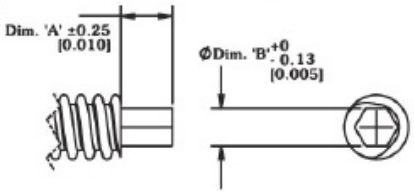

Male Thread

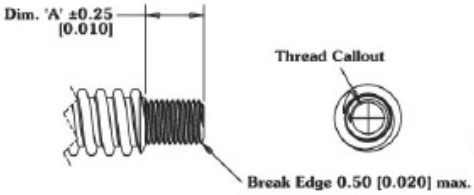

Square End

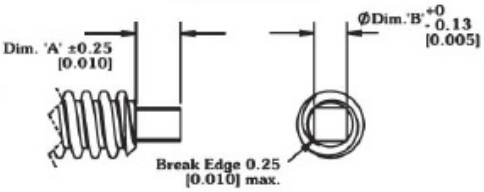

Female Thread

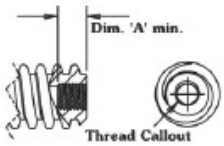

Single Flat

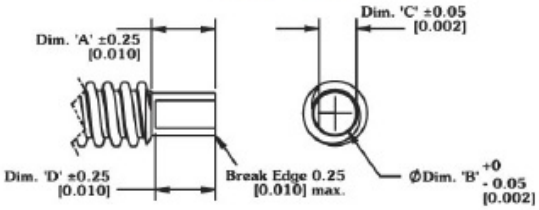

Screwdriver Slot

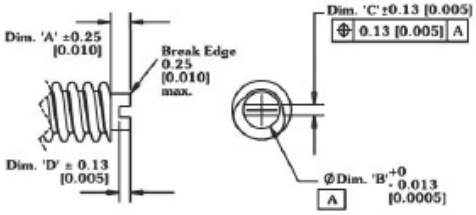

Double Flat

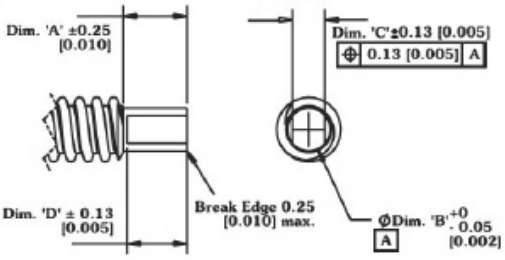

Standard Break Edge

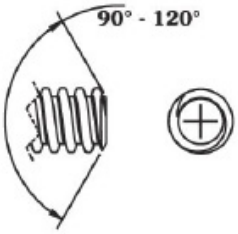

Ground Journal

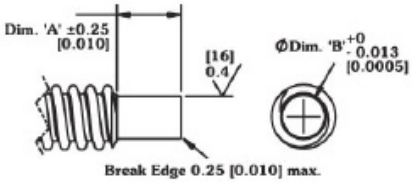

AMETEK Haydon Kerk **Lead Screw and Nut Customization**

Haydon Kerk takes great pride in designing and developing customized solutions for your application needs.

Our Design and Development Engineers begin with our standard catalog products and build ideal solutions for your motion needs. Our factories bring your solutions into production.